SLOVENSKI STANDARD
SIST EN 15163-1:2022

01-september-2022

Nadomešča:
SIST EN 15163:2017

Stroji in oprema za pridobivanje in obdelavo naravnega kamna - Varnost - 1. del: Zahteve za nepremične enožične diamantne žage

Machines and installations for the exploitation and processing of natural stone - Safety - Part 1: Requirements for stationary diamond wire saws

Maschinen und Anlagen zur Gewinnung und Bearbeitung von Naturstein - Sicherheit - Teil 1: Anforderungen für stationäre Diamantseilsägen

Machines et installations pour l'exploitation et la transformation de la pierre naturelle - Sécurité - Partie 1 : Prescriptions pour les scies à fil diamanté fixes

SIST Preview
(https://ecommerce.sist.si)
SIST EN 15163-1:2022
https://ecommerce.sist.si/catalog/standards/sist/06863e52-7e43-47f4-9678-e2ad66bc6d2a/sist-en-15163-1-2022

Ta slovenski standard je istoveten z: **EN 15163-1:2022**

ICS:

25.100.40	Žagni listi	Saws
73.120	Oprema za predelavo rudnin	Equipment for processing of minerals

SIST EN 15163-1:2022 **en,fr,de**

2003-01.Slovenski inštitut za standardizacijo. Razmnoževanje celote ali delov tega standarda ni dovoljeno.

SIST Preview
(https://ecommerce.sist.si)

SIST EN 15163-1:2022
https://ecommerce.sist.si/catalog/standards/sist/06863e52-7e43-47f4-9678-e2ad66bc6d2a/sist-en-15163-1-2022

SIST EN 15163-1:2022

EUROPEAN STANDARD

NORME EUROPÉENNE

EUROPÄISCHE NORM

EN 15163-1

June 2022

ICS 73.120

Supersedes EN 15163:2017

English Version

Machines and installations for the exploitation and processing of natural stone - Safety - Part 1: Requirements for stationary diamond wire saws

Machines et installations pour l'exploitation et la transformation de la pierre naturelle - Sécurité - Partie 1 : Prescriptions pour les scies à fil diamanté fixes

Maschinen und Anlagen zur Gewinnung und Bearbeitung von Naturstein - Sicherheit - Teil 1: Anforderungen für stationäre Diamantseilsägen

This European Standard was approved by CEN on 27 March 2022.

CEN members are bound to comply with the CEN/CENELEC Internal Regulations which stipulate the conditions for giving this European Standard the status of a national standard without any alteration. Up-to-date lists and bibliographical references concerning such national standards may be obtained on application to the CEN-CENELEC Management Centre or to any CEN member.

This European Standard exists in three official versions (English, French, German). A version in any other language made by translation under the responsibility of a CEN member into its own language and notified to the CEN-CENELEC Management Centre has the same status as the official versions.

SIST Preview
(https://ecommerce.sist.si)

CEN members are the national standards bodies of Austria, Belgium, Bulgaria, Croatia, Cyprus, Czech Republic, Denmark, Estonia, Finland, France, Germany, Greece, Hungary, Iceland, Ireland, Italy, Latvia, Lithuania, Luxembourg, Malta, Netherlands, Norway, Poland, Portugal, Republic of North Macedonia, Romania, Serbia, Slovakia, Slovenia, Spain, Sweden, Switzerland, Turkey and United Kingdom.

https://ecommerce.sist.si/catalog/standards/sist/06863e52-7e43-47f4-9678-e2ad66bc6d2a/sist-en-15163-1-2022



EUROPEAN COMMITTEE FOR STANDARDIZATION
COMITÉ EUROPÉEN DE NORMALISATION
EUROPÄISCHES KOMITEE FÜR NORMUNG

CEN-CENELEC Management Centre: Rue de la Science 23, B-1040 Brussels

© 2022 CEN All rights of exploitation in any form and by any means reserved worldwide for CEN national Members.

SIST EN 15163-1:2022

Contents

Page

European foreword ... 4
Introduction ... 5
1 Scope ... 6
2 Normative references ... 6
3 Terms and definitions ... 8
4 Safety requirements and/or protective/risk reduction measures ... 16
4.1 General ... 16
4.2 Controls ... 17
4.2.1 Safety and reliability of control systems ... 17
4.2.2 Position of controls ... 17
4.2.3 Starting ... 18
4.2.4 Normal stop ... 18
4.2.5 Emergency stop ... 19
4.2.6 Mode selection ... 19
4.2.7 Failure of power supply ... 20
4.3 Protection against mechanical hazards ... 21
4.3.1 Transport of the machine ... 21
4.3.2 Installation and stability of machine ... 21
4.3.3 Prevention of access to moving parts ... 21
4.3.4 Safeguards to minimize the effect of ejection ... 23
4.4 Protections against no mechanical hazards ... 27
4.4.1 Fire ... 27
4.4.2 Noise ... 28
4.4.3 Electrical hazards ... 28
4.4.4 Ergonomics and handling ... 29
4.4.5 Hydraulic and pneumatic components ... 29
4.4.6 Electromagnetic compatibility ... 29
4.4.7 Laser radiation ... 30
4.4.8 Isolation from energy sources ... 30
4.4.9 Hazardous materials and substances ... 30
4.4.10 Risk of slipping, tripping or falling ... 30
4.4.11 Lightning ... 34
4.4.12 Maintenance ... 34
5 Information for use ... 34
5.1 General ... 34
5.2 Signals and warning devices ... 34
5.3 Marking, signs and written warnings ... 34
5.4 Instruction handbook ... 35
5.4.1 General ... 35
5.4.2 Operator's instruction ... 35
5.4.3 Maintenance instruction ... 38
Annex A (informative) List of significant hazards ... 40
Annex B (normative) Noise test code ... 43
B.1 Introduction ... 43

SIST Preview
(https://standards.iteh.ai/catalog/standards/sist/06862a52-7a43-47f1-9678-e2ad66ba6d2a/sist-en-15163-1-2022)
SIST EN 15163-1:2022

SIST EN 15163-1:2022

B.2 Measurement of the A-weighted emission sound pressure level at the operator's positions or other specified positions 43
B.2.1 Basic standards 43
B.2.2 Measurement procedure and positions 43
B.2.3 Measurement uncertainty 44
B.3 Determination of A-weighted sound-power level 44
B.3.1 Measurement procedure and positions 44
B.4 Installation, mounting and operating conditions for noise emission measurement 44
B.5 Information to be recorded and reported 45
B.6 Declaration and verification of noise emission values 47
B.6.1 General 47
B.6.2 Example of a declaration of noise emission values in the instruction handbook for stationary diamond wire saws 48
Annex C (informative) Types of granites for noise test measurement 53
Annex D (normative) Rigid guards on stationary diamond wire saws-- Impact test method 56
D.1 General 56
D.2 Test method 56
D.2.1 Preliminary remarks 56
D.2.2 Testing equipment 56
D.2.2.1 General 56
D.2.2.2 Projectiles 56
D.2.2.3 Sampling and supporting the guard under test 57
D.2.3 Test procedure 57
D.3 Results 57
D.4 Assessment 58
D.5 Test report 58
D.6 Example of propulsion device for impact test 58
Annex ZA (informative) Relationship between this European Standard and the essential requirements of Directive 2006/42/EC aimed to be covered 60
Bibliography 63

SIST Preview
(https://ecommerce.sist.si)
SIST EN 15163-1:2022
https://ecommerce.sist.si/catalog/standards/sist/96863a52-7e43-47f4-9678-e2ad66bc6d2a/sist-en-15163-1-2022

SIST EN 15163-1:2022

European foreword

This document (EN 15163-1:2022) has been prepared by Technical Committee CEN/TC 151 “Construction equipment and building material machines - Safety”, the secretariat of which is held by DIN.

This European Standard shall be given the status of a national standard, either by publication of an identical text or by endorsement, at the latest by December 2022, and conflicting national standards shall be withdrawn at the latest by December 2022.

Attention is drawn to the possibility that some of the elements of this document may be the subject of patent rights. CEN shall not be held responsible for identifying any or all such patent rights.

This document supersedes EN 15163:2017.

This document has been prepared under a Standardization Request given to CEN by the European Commission and the European Free Trade Association, and supports essential requirements of EU Directive(s) / Regulation(s).

For relationship with EU Directive(s) / Regulation(s), see informative Annex ZA, which is an integral part of this document.

This document deals with safety requirements of stationary diamond wire saws previously treated in EN 15163:2017 with safety requirements of transportable diamond wire saws now treated in EN 15163-2:2022. As safety requirements related two types of machines have been separated, this document edition is completely different from the previous one.

Standard preview
(https://ecommerce.sist.si)

Safety requirements treated in Clause 4, information for use treated in Clause 5 and related annexes have been deeply modified, in addition, the following changes have been introduced:

SIST EN 15163-1:2022

— list of the significant hazards has been moved from Clause 4 to Annex A, according to 6.10.3.1 of CEN Guide 414;

— normative references have been modified and updated to Clause 2;

— new terms and definitions have been introduced and improved to Clause 3 (e.g. coated diamond wire);

— Annex ZA has been modified according to the last edition of CEN Guide 414.

Any feedback and questions on this document should be directed to the users’ national standards body. A complete listing of these bodies can be found on the CEN website.

According to the CEN-CENELEC Internal Regulations, the national standards organisations of the following countries are bound to implement this European Standard: Austria, Belgium, Bulgaria, Croatia, Cyprus, Czech Republic, Denmark, Estonia, Finland, France, Germany, Greece, Hungary, Iceland, Ireland, Italy, Latvia, Lithuania, Luxembourg, Malta, Netherlands, Norway, Poland, Portugal, Republic of North Macedonia, Romania, Serbia, Slovakia, Slovenia, Spain, Sweden, Switzerland, Turkey and the United Kingdom.

SIST EN 15163-1:2022

Introduction

This document has been prepared to be a harmonized standard to provide one means of conforming to the essential health and safety requirements of the Machinery Directive and associated EFTA Regulations.

This document is a type-C standard as stated in EN ISO 12100.

This document is of relevance, in particular, for the following stakeholder groups representing the market players with regard to machinery safety:

— machine manufacturers (small, medium and large enterprises);

— health and safety bodies (regulators, accident prevention organizations, market surveillance, etc.).

Others can be affected by the level of machinery safety achieved with the means of the document by the above-mentioned stakeholder groups:

— machine users/employers (small, medium and large enterprises);

— machine users/employees (e.g. trade unions, organizations for people with special needs);

— service providers, e.g. for maintenance (small, medium and large enterprises);

— consumers (in case of machinery intended for use by consumers).

The above-mentioned stakeholder groups have been given the possibility to participate at the drafting process of this document.

The machinery concerned and the extent to which hazards, hazardous situations or hazardous events are covered are indicated in the scope of this document.

When requirements of this type-C standard are different from those which are stated in type-A or type-B standards, the requirements of this type-C standard take precedence over the requirements of the other standards for machines that have been designed and built according to the requirements of this type-C standard.

SIST Preview
(https://standards.iteh.ai)
SIST EN 15163-1:2022
https://standards.iteh.ai/catalog/standards/sist/...

SIST EN 15163-1:2022

1 Scope

This document deals with all significant hazards, hazardous situations and events as listed in Annex A, which are relevant to stationary diamond wire saws (stationary diamond mono-wire saws and stationary diamond multi-wire saws), as defined in Clause 3, when they are used as intended and under conditions of misuse which are reasonably foreseeable by the manufacturer.

Stationary diamond wire saws can be used in quarries or in sawmill for cutting natural stones, e.g. marble, granite (see Annex A).

This document deals only with stationary diamond wire saws using coated diamond wire as tool.

This document specifies the appropriate technical measures to eliminate or reduce risks arising from the significant hazards.

This document deals all significant hazards that could occur within the expected lifetime of the machinery including the phases of transport, assembly, dismantling, disabling and scrapping.

This document does not deal with the significant hazards arising by the use of other facilities/devices not described in this document, that could be fitted on the machines or that can be used during the work cycle.

This document does not apply to:

1) machines intended for operation in a potentially explosive atmosphere;

2) machines which are manufactured before the date of publication of this document.

SIST Preview
(https://ecommerce.sist.si)

2 Normative references

The following documents are referred to in the text in such a way that some or all of their content constitutes requirements of this document. For dated references, only the edition cited applies. For undated references, the latest edition of the referenced document (including any amendments) applies.

SIST EN 15163-1:2022
https://standards.iteh.ai/catalog/standards/sist/2-7e43-47f4-9678-e2ad66bc6d2a/sist-en-15163-1-2022

EN 166:2001, *Personal eye-protection — Specifications*

EN 207:2017, *Personal eye-protection equipment — Filters and eye-protectors against laser radiation (laser eye-protectors)*

EN 1005-2:2003+A1:2008, *Safety of machinery — Human physical performance — Part 2: Manual handling of machinery and component parts of machinery*

EN 1005-4:2005+A1:2008, *Safety of machinery — Human physical performance — Part 4: Evaluation of working postures and movements in relation to machinery*

EN 50370-2:2003, *Electromagnetic compatibility (EMC) — Product family standard for machine tools — Part 2: Immunity*

EN 60204-1:2018, *Safety of machinery — Electrical equipment of machines — Part 1: General requirements (IEC 60204-1:2016)*

SIST EN 15163-1:2022

EN 60529:1991,[1] *Degrees of protection provided by enclosures (IP Code) (IEC 60529:1989)*

EN 60825-1:2014,[2] *Safety of laser products — Part 1: Equipment classification and requirements (IEC 60825-1:2014)*

EN ISO 4413:2010, *Hydraulic fluid power — General rules and safety requirements for systems and their components (ISO 4413:2010)*

EN ISO 4414:2010, *Pneumatic fluid power — General rules and safety requirements for systems and their components (ISO 4414:2010)*

EN ISO 4871:2009, *Acoustics — Declaration and verification of noise emission values of machinery and equipment (ISO 4871:1996)*

EN ISO 11201:2010, *Acoustics — Noise emitted by machinery and equipment — Determination of emission sound pressure levels at a work station and at other specified positions in an essentially free field over a reflecting plane with negligible environmental corrections (ISO 11201:2010)*

EN ISO 11202:2010, *Acoustics — Noise emitted by machinery and equipment — Determination of emission sound pressure levels at a work station and at other specified positions applying approximate environmental corrections (ISO 11202:2010)*

EN ISO 11204:2010, *Acoustics — Noise emitted by machinery and equipment — Determination of emission sound pressure levels at a work station and at other specified positions applying accurate environmental corrections (ISO 11204:2010)*

SIST Preview
(https://standards.iteh.ai)

EN ISO 11688-1:2009, *Acoustics — Recommended practice for the design of low-noise machinery and equipment — Part 1: Planning (ISO/TR 11688-1:1995)*

EN ISO 12100:2010, *Safety of machinery — General principles for design — Risk assessment and risk reduction (ISO 12100:2010)*

https://standards.iteh.ai/catalog/standards/sist/06863e52-7e43-47f4-9678-e2ad66bc6d2a/sist-en-15163-1-2022

EN 13236:2019, *Safety requirements for superabrasive products*

EN ISO 13849-1:2015, *Safety of machinery — Safety-related parts of control systems — Part 1: General principles for design (ISO 13849-1:2015)*

EN ISO 13850:2015, *Safety of machinery — Emergency stop function — Principles for design (ISO 13850:2015)*

EN ISO 13857:2019, *Safety of machinery — Safety distances to prevent hazard zones being reached by upper and lower limbs (ISO 13857:2019)*

EN ISO 14118:2018, *Safety of machinery — Prevention of unexpected start-up (ISO 14118:2017)*

EN ISO 14119:2013, *Safety of machinery — Interlocking devices associated with guards — Principles for design and selection (ISO 14119:2013)*

---

[1] As impacted by EN 60529:1991/AC:2006-12, EN 60529:1991/A1:2000, EN 60529:1991/A2:2013 and EN 60529:1991/A2:2013/AC:2019-02.

[2] As impacted by EN 60825-1:2014/AC:2017-06, EN 60825-1:2014/A11:2020.

SIST EN 15163-1:2022

EN ISO 14120:2015, *Safety of machinery — Guards — General requirements for the design and construction of fixed and movable guards (ISO 14120:2015)*

EN ISO 14122-2:2016, *Safety of machinery — Permanent means of access to machinery — Part 2: Working platforms and walkways (ISO 14122-2:2016)*

EN ISO 14122-3:2016, *Safety of machinery — Permanent means of access to machinery — Part 3: Stairs, stepladders and guard-rails (ISO 14122-3:2016)*

EN ISO 14122-4:2016, *Safety of machinery — Permanent means of access to machinery — Part 4: Fixed ladders (ISO 14122-4:2016)*

3 Terms and definitions

For the purposes of this document, the terms and definitions given in EN ISO 12100:2010 and the following apply.

ISO and IEC maintain terminological databases for use in standardization at the following addresses:

— ISO Online browsing platform: available at https://www.iso.org/obp

— IEC Electropedia: available at https://www.electropedia.org/

3.1
stationary diamond wire saw
integrated fed machine designed for cutting natural stones (e.g. marble, granite), in quarries or in sawmills, by the use of one or more coated diamond wires as tools and not intended to be easily transported

SIST Preview
(https://ecommerce.sist.si)

Note 1 to entry: Stationary diamond wire saw may work in one main axis as well as in several axes.

SIST EN 15163-1:2022
https://ecommerce.sist.si/catalog/standards/sist/0e8e3e52-7e45-4714-9678-e2ad66be0d2a/sist-en-15163-1-2022

Note 2 to entry: Stationary diamond wire saws include two types of machines as listed below:

— stationary diamond mono-wire saws;

— stationary diamond multi-wire saws.

3.1.1
stationary diamond mono-wire saw
stationary diamond wire saw, intended for both indoor and outdoor use, powered by an electric motor as main drive, for cutting natural stones into benches, blocks and slabs using an only coated diamond wire as tool and where the cutting is performed by the movement of the wire joined to the moving down of the structure of machine along its vertical columns or joined to the horizontal translation of the machinery or the block trolley

Note 1 to entry: During cutting operation, the coated diamond wire can be cooled by water.

3.1.1.1
travelling diamond mono-wire saw
stationary diamond mono-wire saw (see Figure 1) with a carriage on which the machinery may move towards the stone block

Note 1 to entry: The machinery, by means of the movement on its carriage, in addition to the vertical cutting, allows performing the horizontal cutting of the stone block.

SIST EN 15163-1:2022

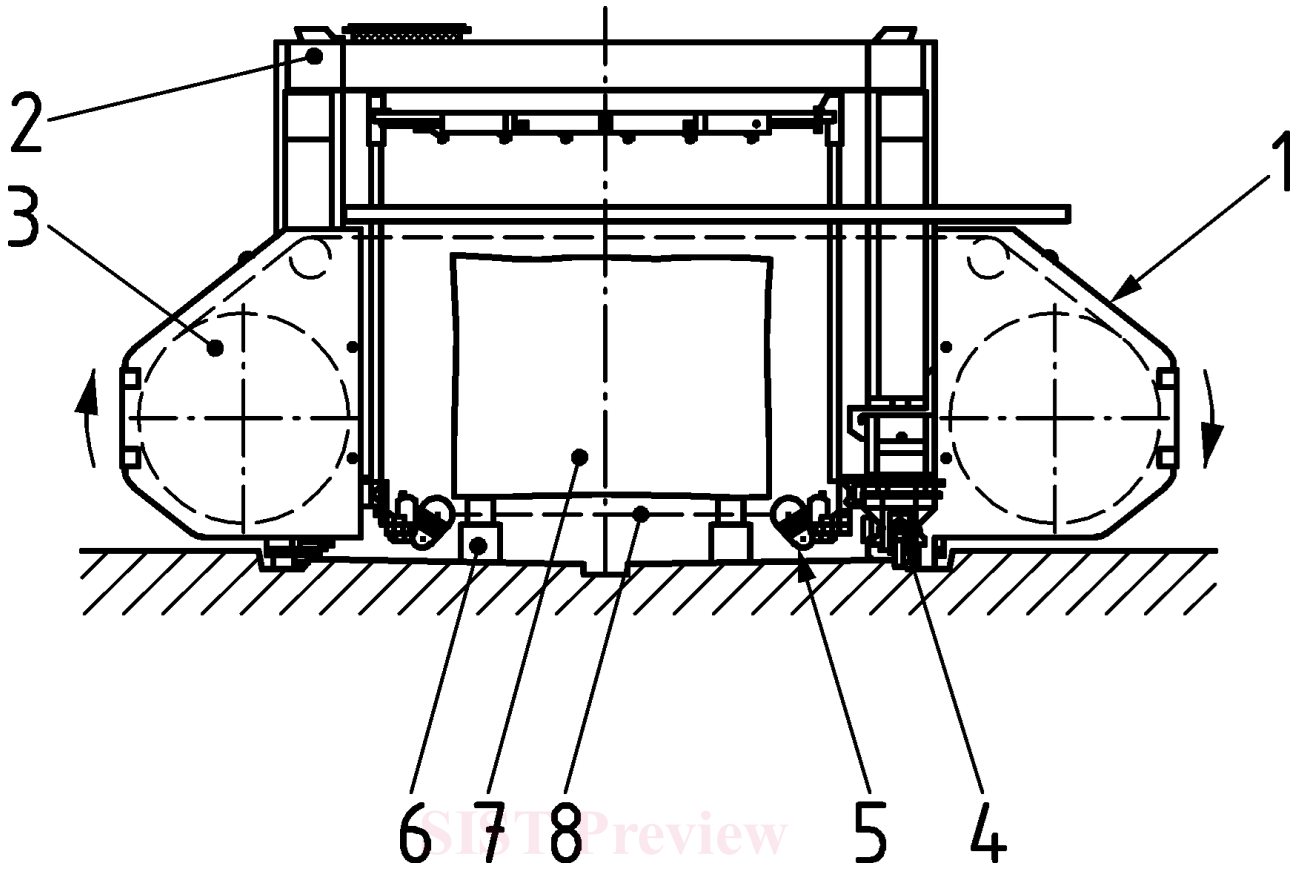

Key

1	guard	4	carriage	7	block
2	machine frame	5	guide wheel	8	coated diamond wire
3	drive wheel	6	sill		

SIST EN 15163-1:2022
https://ecommerce.sist.si/catalog/standards/sist/06863e52-7e43-47f4-9678-e2ad66bc6d2a/sist-en-15163-1-2022

Figure 1 — Example of a travelling diamond mono-wire saw

3.1.1.2
stationary block diamond mono-wire saw
stationary diamond mono-wire saw (see Figures 2 and 3) standing on its foundations and the stone block may be moved under the machinery by a block trolley

Note 1 to entry: If the stone block is moved by the block trolley, the machinery, by means of the movement of the block trolley on its rails, in addition to the vertical cutting, allows performing the horizontal cutting of the stone block.

Note 2 to entry: See Figure 2 for a stationary block diamond mono-wire saw with block trolley and Figure 3 for a stationary block diamond mono-wire saw without block trolley.

SIST EN 15163-1:2022

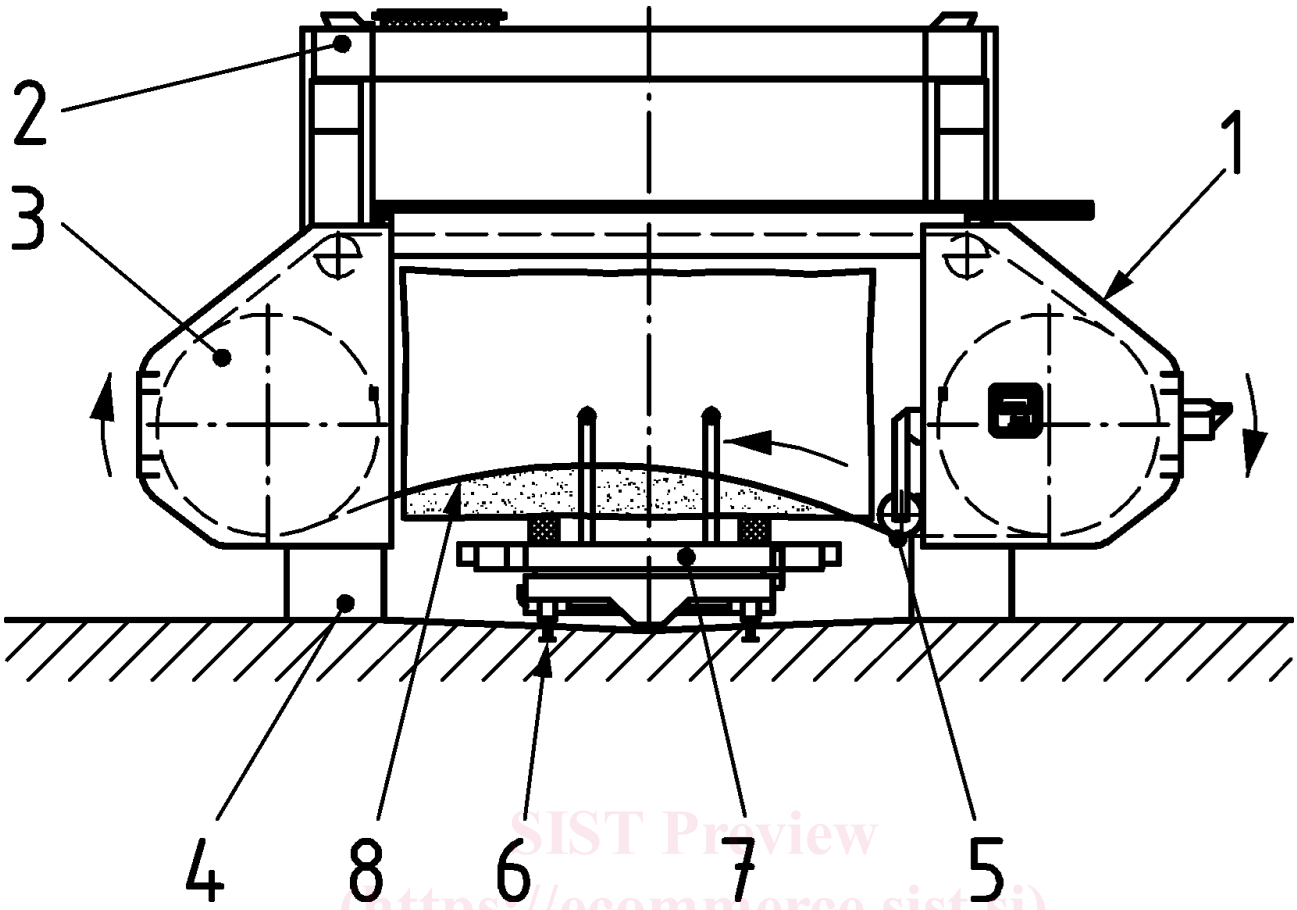

SIST Preview
(https://ecommerce.sist.si)

Key

1	guard	4	foundations	7	block trolley
2	machine frame	5	guide wheel	8	coated diamond wire
3	drive wheel	6	rails for block trolley		

SIST EN 15163-1:2022
https://standards.iteh.ai/catalog/standards/sist/0863e52-7e43-47f4-9678-e2ad66bc6d2a/sist-en-15163-1-2022

Figure 2 — Example of a stationary block diamond mono-wire saw with block trolley

SIST EN 15163-1:2022

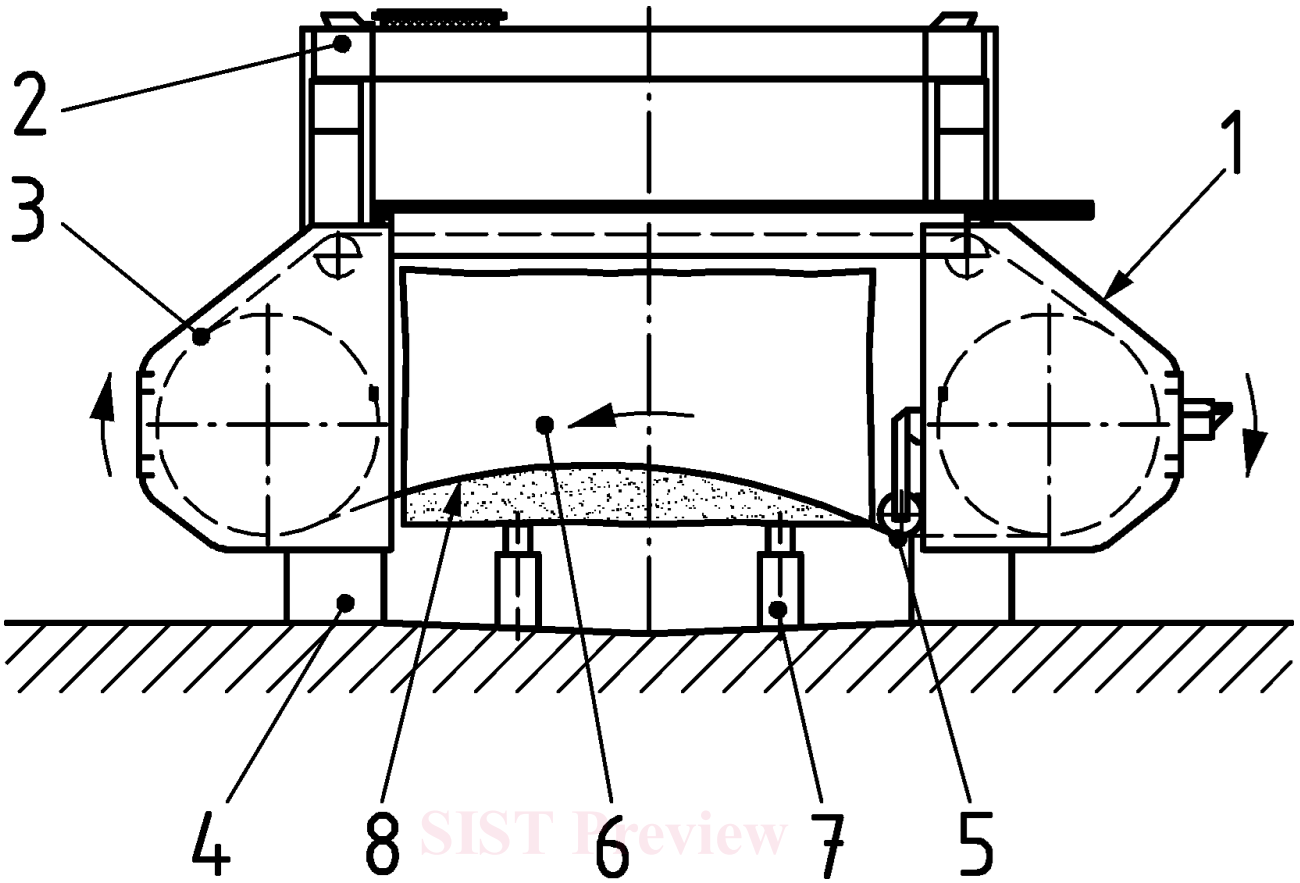

SIST Preview
(https://ecommerce.sist.si)

Key

1	guard	4	foundations	7	sill
2	machine frame	5	guide wheel	8	coated diamond wire
3	drive wheel	6	block		

SIST EN 15163-1:2022
https://ecommerce.sist.si/catalog/standards/sist/06865e52-7e43-47f4-9678-e2ad66bc6d2a/sist-en-15163-1-2022

Figure 3 — Example of a stationary block diamond mono-wire saw without block trolley

3.1.1.3
stationary-mobile combined diamond mono-wire saw
stationary diamond mono-wire (see Figure 4) saw constituted by two frames, the first one is standing on its foundations, the second one is mobile on its rails and may move towards the stone block

Note 1 to entry: The machinery, through of the movement on its rails, in addition to the vertical cutting, allows performing the horizontal cutting of the stone block.

SIST EN 15163-1:2022

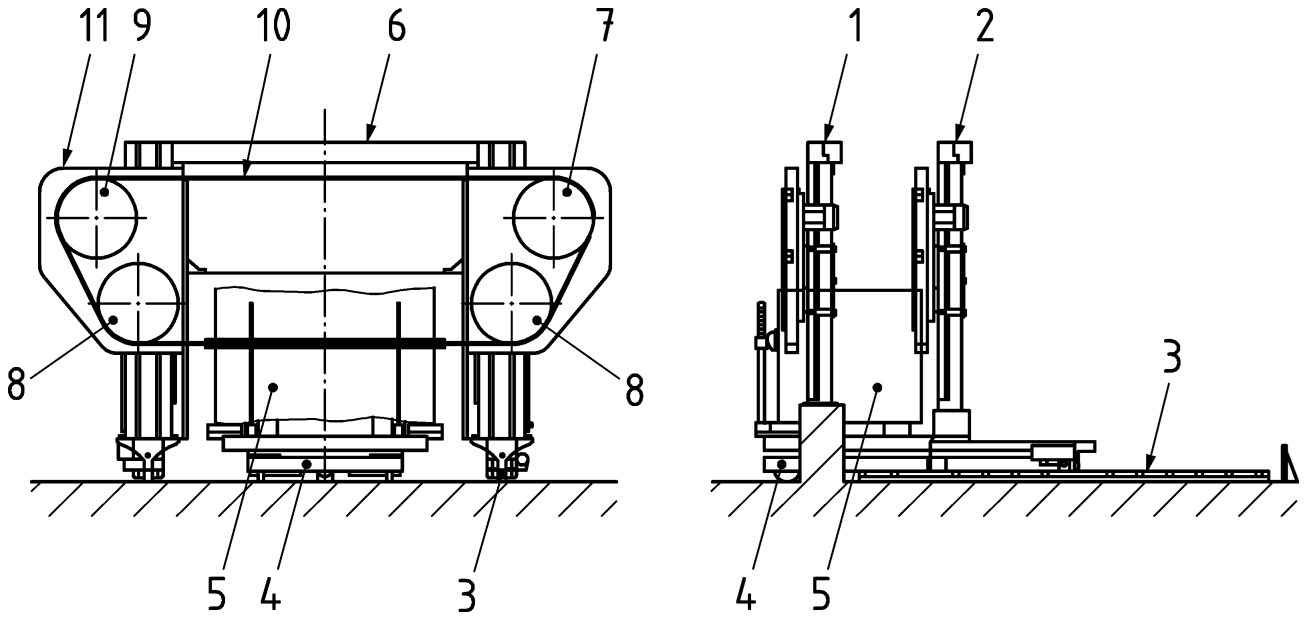

Key

1	stationary wire saw	5	block	9	tensioning wire wheel
2	mobile wire saw	6	machine frame	10	coated diamond wire
3	mobile wire saw rails	7	drive wheel	11	guard
4	block trolley	8	idle wire wheel		

SIST Preview
(https://ecommerce.sist.si)

Figure 4 — Example of a stationary-mobile combined diamond mono-wire saw

3.1.2
stationary diamond multi-wire saw

SIST EN 15163-1:2022
https://ecommerce.sist.si/catalog/standards/sist/06863e57-7e43-42f4-9678-e2ad66ce6d2a/sist-en-15163-1-2022

stationary diamond wire saw, intended both for indoor and outdoor use, powered by an electric motor as main drive, for cutting blocks of natural stones into slabs using more coated diamond wires as tools and where the cutting is performed by the movement of the wires joined to the moving down of the structure of machine along its vertical columns (see Figure 5), or joined the rising of the block trolley (see Figure 6)

Note 1 to entry: During the cutting operation, the diamond wires can be cooled by water.

SIST EN 15163-1:2022

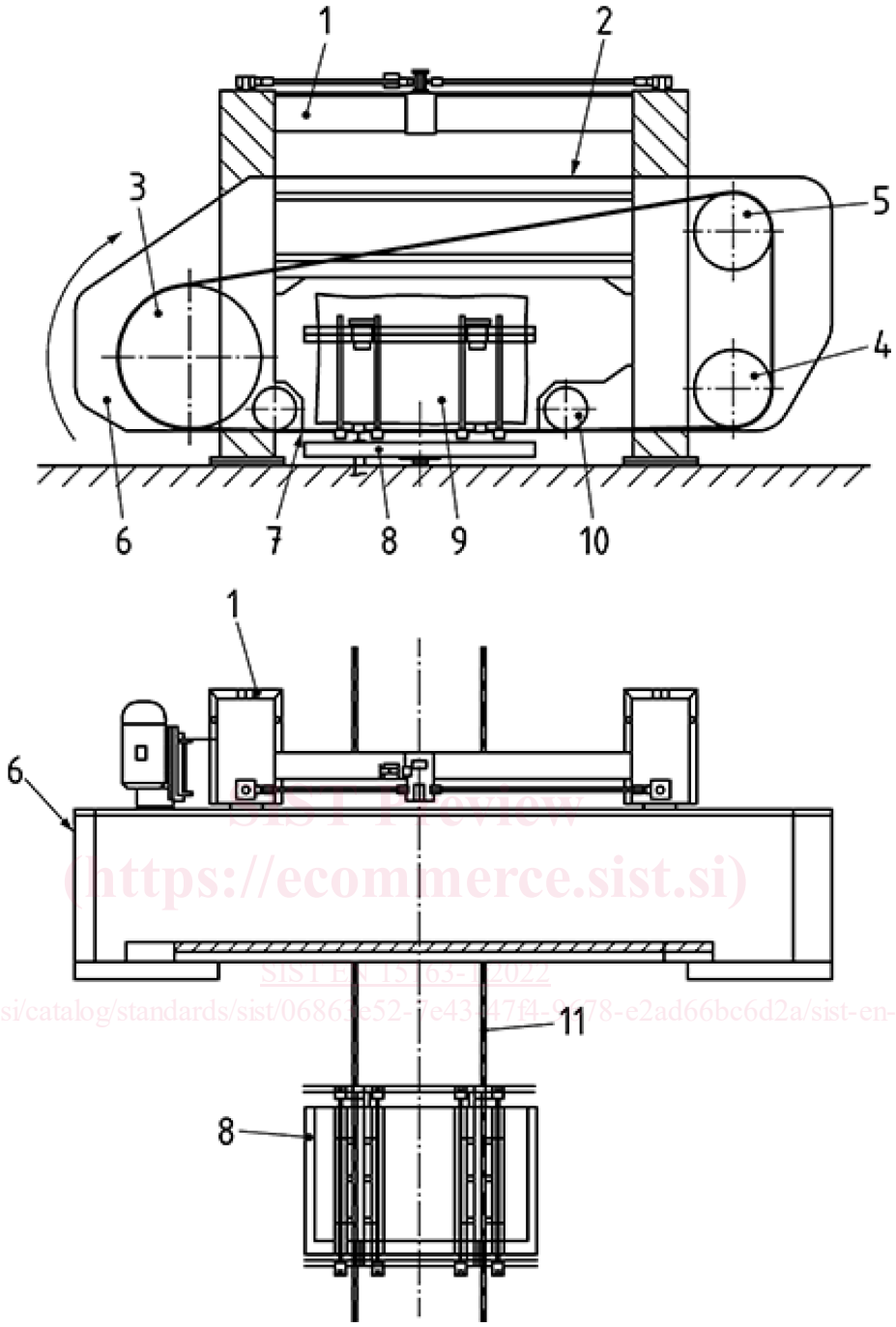

SIST Preview
(https://ecommerce.sist.si)
SIST EN 15163-1:2022
https://ecommerce.sist.si/catalog/standards/sist/0686...e52-...e43...47f1-...78-e2ad66bc6d2a/sist-en-15163-1-2022

Key

1	machine frame	5	tensioning wire wheel	9	block
2	saw frame	6	guard	10	guide wheel
3	drive wheel	7	coated diamond wire	11	trolley rail
4	idle wire wheel	8	block trolley		

Figure 5 — Example of a stationary diamond multi-wire saw