SLOVENSKI STANDARD
SIST EN 16165:2021

01-december-2021

Nadomešča:
SIST-TS CEN/TS 16165:2016

Ugotavljanje odpornosti talnih površin proti zdrsu - Metoda vrednotenja

Determination of slip resistance of pedestrian surfaces - Methods of evaluation

Bestimmung des Gleitwiderstandes von Fußgängerbereichen - Ermittlungsverfahren

Détermination de la résistance à la glissance des surfaces piétonnières - Méthodes d'évaluation

SIST Preview
(https://ecommerce.sist.si)
(https://ecommerce.sist.si)

Ta slovenski standard je istoveten z: **EN 16165:2021**

SIST EN 16165:2021
https://ecommerce.sist.si/catalog/standards/sist/babb0ebf-1ead-4d87-8a32-de042a98ba50/sist-en-16165-2021
SIST EN 16165:2021
https://ecommerce.sist.si/catalog/standards/sist/babb0ebf-1ead-4d87-8a32-de042a98ba50/sist-en-16165-2021

ICS:

17.040.20	Lastnosti površin	Properties of surfaces
93.080.10	Gradnja cest	Road construction

SIST EN 16165:2021 **en,fr,de**

2003-01.Slovenski inštitut za standardizacijo. Razmnoževanje celote ali delov tega standarda ni dovoljeno.

SIST EN 16165:2021

SIST Preview
(https://ecommerce.sist.si)

SIST EN 16165:2021
https://ecommerce.sist.si/catalog/standards/sist/babb0ebf-1ead-4d87-8a32-de042a98ba50/sist-en-16165-2021

SIST EN 16165:2021

EUROPEAN STANDARD

NORME EUROPÉENNE

EUROPÄISCHE NORM

EN 16165

October 2021

ICS 17.040.20; 91.060.30; 93.080.10

Supersedes CEN/TS 16165:2016

English Version

Determination of slip resistance of pedestrian surfaces - Methods of evaluation

Détermination de la résistance à la glissance des surfaces piétonnières - Méthodes d'évaluation

Bestimmung der Rutschhemmung von Fußböden - Ermittlungsverfahren

This European Standard was approved by CEN on 25 July 2021.

CEN members are bound to comply with the CEN/CENELEC Internal Regulations which stipulate the conditions for giving this European Standard the status of a national standard without any alteration. Up-to-date lists and bibliographical references concerning such national standards may be obtained on application to the CEN-CENELEC Management Centre or to any CEN member.

This European Standard exists in three official versions (English, French, German). A version in any other language made by translation under the responsibility of a CEN member into its own language and notified to the CEN-CENELEC Management Centre has the same status as the official versions.

CEN members are the national standards bodies of Austria, Belgium, Bulgaria, Croatia, Cyprus, Czech Republic, Denmark, Estonia, Finland, France, Germany, Greece, Hungary, Iceland, Ireland, Italy, Latvia, Lithuania, Luxembourg, Malta, Netherlands, Norway, Poland, Portugal, Republic of North Macedonia, Romania, Serbia, Slovakia, Slovenia, Spain, Sweden, Switzerland, Turkey and United Kingdom.

SIST Preview
(https://standards.iteh.ai)
SIST EN 16165:2021
https://ecommerce.sist.si/catalog/standards/sist/babb0ebf-1ead-4d87-8a32-de042a98ba50/sist-en-16165-2021



EUROPEAN COMMITTEE FOR STANDARDIZATION
COMITÉ EUROPÉEN DE NORMALISATION
EUROPÄISCHES KOMITEE FÜR NORMUNG

CEN-CENELEC Management Centre: Rue de la Science 23, B-1040 Brussels

© 2021 CEN All rights of exploitation in any form and by any means reserved worldwide for CEN national Members.

Ref. No. EN 16165:2021 E

SIST EN 16165:2021

Contents

Page

European foreword ... 3
Introduction ... 4
1 Scope ... 5
2 Normative references ... 5
3 Terms and definitions ... 5
3.1 General terms ... 5
3.2 Terms related to ramp tests ... 6
3.3 Terms related to pendulum tests ... 6
3.4 Terms related to tribometer tests ... 6
4 Test methods ... 7
Annex A (normative) Barefoot ramp test ... 8
Annex B (normative) Shod ramp test ... 14
Annex C (normative) Pendulum test ... 21
Annex D (normative) Tribometer test ... 46
Bibliography ... 53

SIST Preview
(https://ecommerce.sist.si)
SIST EN 16165:2021
https://ecommerce.sist.si/catalog/standards/sist/babb0ebf-1ead-4d87-8a32-de042a98ba50/sist-en-16165-2021

SIST EN 16165:2021

European foreword

This document (EN 16165:2021) has been prepared by Technical Committee CEN/TC 339 “Slip resistance of pedestrian surfaces - Methods of evaluation”, the secretariat of which is held by DIN.

This European Standard shall be given the status of a national standard, either by publication of an identical text or by endorsement, at the latest by April 2022, and conflicting national standards shall be withdrawn at the latest by April 2022.

Attention is drawn to the possibility that some of the elements of this document may be the subject of patent rights. CEN shall not be held responsible for identifying any or all such patent rights.

This document supersedes CEN/TS 16165:2016.

The main changes compared to the previous edition are as follows:

a) description of test surface used in the barefoot ramp test and the shod ramp test changed;

b) calibration procedure of the test device used in the barefoot ramp test changed;

c) angles of slip for the three standard surfaces used in the barefoot ramp test changed;

d) procedure for verification and correction in the barefoot ramp test changed;

e) description of the test procedure used in the barefoot ramp test changed;

f) description of test footwear used in the shod ramp test changed;

g) angles of slip for the three standard surfaces used in the shod ramp test changed;

h) information when slider pads and slider assemblies shall be re-prepared or discarded added to the pendulum test;

i) description of the verification procedure used in the pendulum test and the tribometer test changed;

j) Reference surfaces for pendulum test and tribometer tests were removed;

k) procedure for the preparation of sliders used in the tribometer test changed.

Any feedback and questions on this document should be directed to the users’ national standards body. A complete listing of these bodies can be found on the CEN website.

According to the CEN-CENELEC Internal Regulations, the national standards organisations of the following countries are bound to implement this European Standard: Austria, Belgium, Bulgaria, Croatia, Cyprus, Czech Republic, Denmark, Estonia, Finland, France, Germany, Greece, Hungary, Iceland, Ireland, Italy, Latvia, Lithuania, Luxembourg, Malta, Netherlands, Norway, Poland, Portugal, Republic of North Macedonia, Romania, Serbia, Slovakia, Slovenia, Spain, Sweden, Switzerland, Turkey and the United Kingdom.

SIST Preview
(https://ecommerce.sist.si)
SIST EN 16165:2021
https://ecommerce.sist.si/catalog/standards/sist/babb0ebf-1ead-4d87-8a32-de042a98ba50/sist-en-16165-2021

SIST EN 16165:2021

Introduction

This document describes four test methods commonly used in Europe for the determination of the slip resistance of floorings.

The method in Annex A describes the test method based on the ramp using water as the test liquid and with the operator barefoot. This method cannot be used *in situ*. It is referred to as the “Barefoot ramp method”.

The method in Annex B describes the test method based on the ramp using oil as the test liquid and with the operator wearing specified shoes. This method cannot be used *in situ*. It is referred to as the “Shod ramp test”.

NOTE Oil is used as the test liquid to make the test more sensitive.

The method in Annex C describes the test method based on the pendulum in dry and wet conditions using specified rubber sliders. This method can be used *in situ*. It is referred to as the “Pendulum test”.

The method in Annex D describes the test method based on the tribometer in dry and wet conditions using specified rubber sliders. This method can be used *in situ*. It is referred to as the “Tribometer test”.

The purpose of this document is to harmonize the procedures used when using any of the above test methods. It is not intended to promote any particular test method to Product Group Technical Committees or to limit their choice.

The test methods given in this document cannot be compared with each other. The results can only be compared with results that are obtained with the same test method.

SIST Preview
(https://ecommerce.sist.si)
SIST EN 16165:2021
https://ecommerce.sist.si/catalog/standards/sist/babb0ebf-1ead-4d87-8a32-de042a98ba50/sist-en-16165-2021

SIST EN 16165:2021

1 Scope

This document specifies test methods for determining the slip resistance of surfaces used by pedestrians.

NOTE It is also possible to use this document for measurements where persons might walk on trafficked areas.

2 Normative references

The following documents are referred to in the text in such a way that some or all of their content constitutes requirements of this document. For dated references, only the edition cited applies. For undated references, the latest edition of the referenced document (including any amendments) applies.

EN ISO 868, *Plastics and ebonite — Determination of indentation hardness by means of a durometer (Shore hardness) (ISO 868)*

ISO 48-2, *Rubber, vulcanized or thermoplastic — Determination of hardness — Part 2: Hardness between 10 IRHD and 100 IRHD*

ISO 48-4, *Rubber, vulcanized or thermoplastic — Determination of hardness — Part 4: Indentation hardness by durometer method (Shore hardness)*

ISO 5725-2, *Accuracy (trueness and precision) of measurement methods and results — Part 2: Basic method for the determination of repeatability and reproducibility of a standard measurement method*

ISO 5725-5, *Accuracy (trueness and precision) of measurement methods and results — Part 5: Alternative methods for the determination of the precision of a standard measurement method*

SIST Preview
(standards.iteh.ai)

3 Terms and definitions

SIST EN 16165:2021
https://standards.iteh.ai/catalog/standards/sist/babb0ebf-1ead-4d87-8a32-de042a08ba50/sist-en-16165-2021

For the purposes of this document, the following terms and definitions apply.

ISO and IEC maintain terminological databases for use in standardization at the following addresses:

— ISO Online browsing platform: available at https://www.iso.org/obp

— IEC Electropedia: available at https://www.electropedia.org/

3.1 General terms

3.1.1
pedestrian surface
surface which is designed for people to walk upon

3.1.2
test liquid
standardized liquid applied on the surface for the purpose of the test

3.1.3
friction
resistance to relative motion between two bodies in contact, e.g. the test slider or the footwear sole and the pedestrian surface

Note 1 to entry: The frictional force is the force acting tangentially in the contact area.

SIST EN 16165:2021

3.1.4
slip
loss of traction which can cause the test persons to lose their footing

3.1.5
slip resistance
measure of dynamic friction between two surfaces in contact with or without the presence of a specified test liquid

Note 1 to entry: The frictional force opposing movement of an object across a surface, usually with reference to the sole (including the heel) of a shoe or to the barefoot contact area on a floor. Slip resistance of a pedestrian surface is the property of the surface which counteracts the relative sliding movement.

3.2 Terms related to ramp tests

3.2.1
angle of slip
lowest angle of the inclined ramp at which the test person reaches the limit of safe walking when slipping occurs

3.2.2
test person
person who walks on the test surface or standard surface

3.2.3
test walk
walk to determine a single angle of slip

SIST Preview
(https://ecommerce.sist.si)

3.3 Terms related to pendulum tests

SIST EN 16165:2021
https://ecommerce.sist.si/catalog/standards/sist/babb0ebf-1ead-4d87-8a32-de042a98ba50/sist-en-16165-2021

3.3.1
pendulum test value
PTV
standardized value of the slip resistance as measure of the friction between the slider and the test surface obtained with the pendulum friction tester which incorporates a slider manufactured of rubber

3.4 Terms related to tribometer tests

3.4.1
dynamic coefficient of friction
μ
quotient of the horizontal frictional force and the vertically acting force between the slider and the horizontal surface during movement at a constant speed

3.4.2
sliding distance
distance over which the body is pulled during a single measurement

3.4.3
measuring distance
distance over which the sliding friction coefficient is determined

SIST EN 16165:2021

3.4.4
measurement series
series consisting of five single measurements on one measuring distance

4 Test methods

Carry out a test according to Annex A to Annex D. If tests are performed in the laboratory, the room temperature should be (20 ± 5) °C unless otherwise stated.

SIST Preview
(https://ecommerce.sist.si)

SIST EN 16165:2021
https://ecommerce.sist.si/catalog/standards/sist/babb0ebf-1ead-4d87-8a32-de042a98ba50/sist-en-16165-2021

SIST EN 16165:2021

Annex A
(normative)

Barefoot ramp test

A.1 Principle

Two bare-foot test persons are used to determine the angle of slip, while the pedestrian surface material being tested is continuously coated with water containing a wetting agent. The test persons, each in turn, facing down the ramp and with an upright posture, move forwards and backwards over the test surface, as they increase their angle of inclination, until the safe limit of walking is reached and a slip occurs. The mean angle of slip obtained is used to express the degree of slip resistance. Subjective influences on the angle of slip are limited by means of a correction procedure.

A.2 Test equipment

A.2.1 Test apparatus with safety devices

The test device (Figure A.1) is a level and torsion-free platform of approximately 600 mm width and 2 000 mm length which can be adjusted longitudinally as a continuous movement to gradients from 0° to approximately 45°. The lifting stroke is controlled by the test person. An angle indicator on the test device shall show the platform tilt away from the horizontal plane at an accuracy of ± 0,2°. The test apparatus shall be rigid such that the angle does not vary by more than ± 0,5° during the walking. The display of the angle measurement system shall be fixed in such a way that the test person cannot read it during the test. The test person is safeguarded by railings along the sides and protected from falling by a safety harness, which shall not cause a hindrance to the test person when walking on the pedestrian surface material under test.

SIST EN 16165:2021
https://ecommerce.sist.si/catalog/standards/sist/babb0ebf-1ead-4d87-8a32-de042a98ba50/sist-en-16165-2021

SIST EN 16165:2021

Dimensions in millimetres

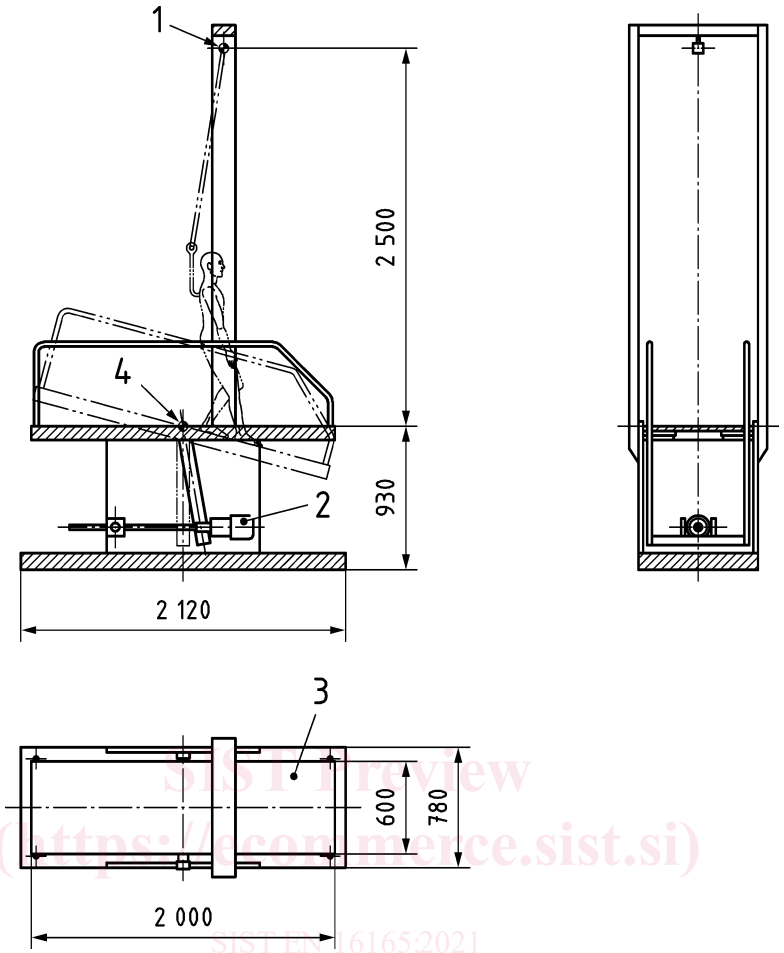

SIST EN 16165:2021
https://standards.iteh.ai/catalog/standards/sist/babb0ebf-1ead-4d87-8a32-de042a98ba50/sist-en-16165-2021

Key

1 safety harness and fall arrest system
2 drive unit
3 inclinable walkway area on which the test surface or standard surface is fixed
4 angle indicator

Figure A.1 — Example of a typical test apparatus

A.2.2 Standard surfaces

Three standard surfaces, St-A, St-B and St-C, are used for the training and verification of test persons and the correction of the test results. The angle of slip (α) of these surfaces are given in Table A.1 and are specified as angles of slip $\alpha_{S,St\text{-}A}$, $\alpha_{S,St\text{-}B}$ and $\alpha_{S,St\text{-}C}$ of the three standard surfaces. The critical differences of CrD_{95} are determined for the three standard surfaces for a significance level of 95 % from the comparison and repetition limits according to ISO 5725-2 or ISO 5725-5. [7]

NOTE The critical difference of CrD_{95} indicates the spreading of measured values during measurements on the same object at various test locations, or coincidental deviations during repeated measurements at the same test location.

SIST EN 16165:2021

Table A.1 — Angle of slip and critical difference values of the three standard surfaces

Standard surface (n)	Angle of slip $\alpha_{S,n}$ [°]	Critical difference CrD_{95} [°]
St-A	12,4	3,9
St-B	20,9	4,3
St-C	26,7	4,4

When testing barefoot, the standard surfaces can become contaminated with body fats/oils. This may affect the performance of the surface. It is important to know, when verifying or correcting, that any changes in the surface are due to wear or the operator and not contamination. It is recommended to thoroughly clean the surfaces regularly.

A.2.3 Test liquid

Aqueous solution of a low foaming non-ionic surfactant such as LS45 (CAS-No. 68439-51-0) in a concentration of 1 g/l (aqueous solution: 0,1 % LS45 in water) shall be used as the test liquid. Prior to and during testing the aqueous solution shall be applied at (6,0 ± 1,0) l/min using appropriate means so as to form a largely uniform distribution of test liquid across the test surface. The temperature range of the solution shall be in between (29,0 ± 2,0) °C.

The test liquid may only be used once and shall not be re-circulated.

A.2.4 Test surface

SIST Preview
(https://ecommerce.sist.si)

The test surface shall have a minimum length of 1 000 mm and a minimum width of 400 mm. The test surface shall be either self-supporting, or securely mounted on a suitable flat surface.

The test surface shall be clean.

NOTE The floor manufacturer's instructions can be useful for cleaning.

SIST EN 16165:2021
https://ecommerce.sist.si/catalog/standards/sist/babb9ebf-1ead-4d87-8a32-de042a98ba50/sist-en-16165-2021

If the slip resistance differs depending on the direction of walking, then it will be necessary to determine the direction of lowest slip resistance. It is recommended that tests are carried out in at least two directions (longitudinally and laterally) to establish whether there is directionality of the slip resistance of the sample. Once a lack of directionality has been established, it is acceptable to test in a single direction. If the test surface is produced by the customer, they are responsible that the direction of the lowest slip resistance is mounted in the longitudinal direction of the test surface.

Materials designed to be used in one direction should be tested in the intended direction of use.

A.3 Calibration of the test device

The inclination of the inclinable walkway surface shall be calibrated annually and checked periodically.

A.4 Training of test persons

The test persons shall be trained for the test (e.g. gait, walking speed, skin condition). The training procedure of the test person shall be carried out as follows:

Each test person j shall walk according to A.5, a) to n) on each standard surface (A.2.2) four times and the average training values are determined out of the last three values:

$$\alpha_{\mathrm{T,St-A},j}\,;\ \alpha_{\mathrm{T,St-B},j}\,;\ \alpha_{\mathrm{T,St-C},j}$$

SIST EN 16165:2021

For each test-person the individual differences according to Formula (A.1):

$$\Delta\alpha_{n,j} = \alpha_{S,n} - \alpha_{T,n,j} \quad (n = \text{St-A, St-B and St-C}) \tag{A.1}$$

are calculated and result in:

$$\Delta\alpha_{St-A,j};\ \Delta\alpha_{St-B,j};\ \Delta\alpha_{St-C,j}$$

If each of the individual differences $\Delta\alpha_{St-A,j}$; $\Delta\alpha_{St-B,j}$; $\Delta\alpha_{St-C,j}$ are inside of the critical differences, the test person is trained for the test.

$$\left|\Delta\alpha_{n;j}\right| \leq CrD_{95} \quad \text{(see Table A.1)} \tag{A.2}$$

A.5 Test procedure

a) The test surface shall be mounted on the test device so that the direction of the lowest slip resistance is in the direction of walking movement. For determining the slip resistance characteristics of surfaces with directional surface profiles or texture, see A.2.4.

b) The test surface (see A.2.4) shall be clean.

c) The test person *j* shall soak their feet in water containing the test liquid (see A.2.3) for ten minutes before starting the test.

d) The test person shall put on the harness (see A.2.1). The test person shall then attach to the fall arrest system (see A.2.1).

e) The test person shall mount the ramp (which shall be set to the horizontal position) so as to stand on the test surface.

f) Application of the test liquid (see A.2.3).

g) Facing down the ramp and looking at their feet, the test person, using a half-step gait and using the flat of the foot, shall take a minimum of four steps down the test surface (walking forwards), and then take half-steps up the test surface (walking backwards) to return to their starting position. The test person shall walk up and down the test surface twice before raising the ramp by a small amount. This continues until a slip occurs. When high angles are achieved, the steps for raising the ramp may be higher in the lower angle area.

h) It is essential to maintain a rhythm of about 144 half steps per minute. A metronome or similar should be used to keep pace. Above a ramp angle of 20°, the pace is less important.

i) Once a slip occurs the walk shall be repeated at the angle of slip and if a further slip occurs then this angle is recorded.

j) If there is no second slip the test is continued, raising the angle by a small amount until two slips occur at the same angle.

k) It is important that around the point of slip the angle is not raised too much in one step. Incremental rises shall therefore be small at this point.

l) If it is suspected that the angle has been raised by too great an amount around the point of slip then the angle shall be lowered to below the angle of slip and the run repeated using smaller increments.

SIST Preview
(https://ecommerce.sist.si)
SIST EN 16165:2021
https://standards.iteh.ai/catalog/standards/sist/0ebf-1ead-4d87-8a32-de042a98ba50/sist-en-16165-2021

SIST EN 16165:2021

m) If the test person is still able to walk on the test sample at an angle of 30° then the test shall be stopped unless there is agreement between parties to go to higher angles.

n) Record the angle, $\alpha_{0,i,j}$ with i = 1;2;3;4 rounded to the nearest 0,1°.

o) Repeat the procedure (steps d) to n)) from the horizontal or from an angle approximately 10° below the angle of slip three more times. Discard the first angle of slip with i = 1 and calculate the mean value $\alpha_{0,j}$ from the last three angles of slip with i = 2;3;4.

p) Depending on the mean value $\alpha_{0,j}$ one of the three standard surfaces shall be selected and mounted on the test device for a verification and correction procedure (see Table A.2).

Table A.2 —Selection of a standard surface for correction

Case	Standard surface
$\alpha_{0,j} < 16,7°$	St-A
$16,7° \leq \alpha_{0,j} < 23,8°$	St-B
$23,8° \leq \alpha_{0,j}$	St-C

q) The test steps a) to l) shall be carried out four times on the selected standard surface and given the angles of slip for correction $\alpha_{C,n,i,j}$ with n = St-A, St-B or St-C and i = 1;2;3;4. Discard the first angle of slip with i = 1 and calculate the mean value $\alpha_{C,n,j}$ from the last three angles of slip $\alpha_{C,n,i,j}$ with i = 2;3;4.

The test [test steps a) to q)] shall be repeated by a second test person.

SIST Preview
(https://ecommerce.sist.si)

A.6 Verification and correction

SIST EN 16165:2021
https://ecommerce.sist.si/catalog/standards/sist/babb0ebf-1ead-4d87-8a32-de042a98ba50/sist-en-16165-2021

A.6.1 General

For every single test surface and test person the verification and correction procedure shall be carried out.

A.6.2 Verification

For each test-person the individual difference between the angle of slip of the standard surface (Table A.1) and the angle of slip for correction (see A.5 q)) according to Formula (A.3) is calculated:

$$\Delta\alpha_{n,j} = \alpha_{S,n} - \alpha_{C,n,j} \text{ . } (n = \text{St-A, St-B or St-C}) \quad \text{(A.3)}$$

If the individual difference is inside of the critical difference (see Formula (A.4)) the test person is verified. The correction according to A.6.3 can be made and the result can be used.

$$\left|\Delta\alpha_{n;j}\right| \leq CrD_{95} \text{ (see Table A.1)} \quad \text{(A.4)}$$

If the individual difference is higher than the critical difference, the result for that test surface from this test person has to be discarded and the test person has to be replaced by another test person.

The results of other tested surfaces on that test day, that was verified correctly, are still valid.

SIST EN 16165:2021

A.6.3 Correction

For two test persons a correction value, D_j (D_1 and D_2) is calculated for each tested surface from the value obtained from the selected standard surface. The calculated correction value, D_j, is added to the mean value of each test surface $\alpha_{0,j}$ giving the corrected value for one test person α_j (α_1 or α_2).

The calculation of D_j shall be carried out in accordance with one of the three cases given in Table A.3.

Table A.3 — Correction value depending on the size of the mean angle of slip

Case	Correction value D_j for test surface
$\alpha_{0,j} < 16,7°$	$D_j = \left[12,4° - \alpha_{C,St-A,j}\right] \times \frac{1}{\sqrt{2}}$
$16,7° \leq \alpha_{0,j} < 23,8°$	$D_j = \left[20,9° - \alpha_{C,St-B,j}\right] \times \frac{1}{\sqrt{2}}$
$23,8° \leq \alpha_{0,j}$	$D_j = \left[26,7° - \alpha_{C,St-C,j}\right] \times \frac{1}{\sqrt{2}}$

where

$\alpha_{0,j}$ is the mean angle of slip for test person j;

D_j is the correction value for test person j for the current test surface;

$\alpha_{C,\text{St-A},j}$ is the average correction value for test person j walking on standard surface St-A;

$\alpha_{C,\text{St-B},j}$ is the average correction value for test person j walking on standard surface St-B;

$\alpha_{C,\text{St-C},j}$ is the average correction value for test person j walking on standard surface St-C.

The corrected mean angle of slip of test person 1 (α_1) and test person 2 (α_2) shall be added together and divided by 2 creating the test result α_{barefoot} rounded to the nearest 1°.

A.7 Test report

The following information shall be given in the test report:

a) reference to this European Standard (including its year of publication);

b) method used (i.e. Annex A);

c) test organization and name of the person responsible for the test;

d) date of test;

e) identity of test surfaces or designation, manufacturer, product, where applicable quality class, colour and dimensions of products used for the surface (if this information is known);

f) surface structure (e.g. smooth, profiled, structured);

g) ramp test value, α_{barefoot}, rounded to the nearest 1 degree.

h) any further remarks when appropriate such as, surface conditions tested and cleaning method, regular maintenance procedures, surface treatments and/or the sampling method.