INTERNATIONAL STANDARD

ISO 17712

Second edition
2013-05-15

Freight containers — Mechanical seals

Conteneurs pour le transport de marchandises — Scellés mécaniques

SIST Preview
(https://ecommerce.sist.si)

ISO 17712:2013
https://ecommerce.sist.si/catalog/standards/sist/edfc2815-4b66-47f3-957d-79f27d5f4f9e/iso-17712-2013

Reference number
ISO 17712:2013(E)

© ISO 2013

SIST Preview
(https://ecommerce.sist.si)

ISO 17712:2013
https://ecommerce.sist.si/catalog/standards/sist/edfc2815-4b66-47f3-957d-79f27d5f4f9e/iso-17712-2013



COPYRIGHT PROTECTED DOCUMENT

© ISO 2013

All rights reserved. Unless otherwise specified, no part of this publication may be reproduced or utilized otherwise in any form or by any means, electronic or mechanical, including photocopying, or posting on the internet or an intranet, without prior written permission. Permission can be requested from either ISO at the address below or ISO's member body in the country of the requester.

ISO copyright office
Case postale 56 • CH-1211 Geneva 20
Tel. + 41 22 749 01 11
Fax + 41 22 749 09 47
E-mail copyright@iso.org
Web www.iso.org

Published in Switzerland

Contents

Page

Foreword ..... **iv**

1 Scope **1**

2 Normative references **1**

3 Terms and definitions **1**
3.1 General terms 1
3.2 Terms describing different types of mechanical seals 2

4 Seal requirements **4**
4.1 General and environmental 4
4.2 Marking 4
4.3 Identification marks 5
4.4 Evidence of tampering 5

5 Testing for seal classification **6**
5.1 General 6
5.2 Tensile test 6
5.3 Shear test 11
5.4 Bending test 15
5.5 Impact test 17
5.6 Seal classification test report 19

6 Evidence of tampering **19**
6.1 General 19
6.2 Test apparatus 20
6.3 Test tools 21
6.4 Test methods 21
6.5 Evidence of tampering 22
6.6 Test results 23

Annex A (normative) **Seal manufacturers' security-related practices** **24**

Annex B (normative) **Transition time for requirements of amended Clause 6** **29**

Bibliography **30**

SIST Preview
(https://ecommerce.sist.si)
ISO 17712:2013
https://ecommerce.sist.si/catalog/standards/sist/edfc2815-4b66-47f3-957d-79f27d5f4f9e/iso-17712-2013

© ISO 2013 – All rights reserved

Foreword

ISO (the International Organization for Standardization) is a worldwide federation of national standards bodies (ISO member bodies). The work of preparing International Standards is normally carried out through ISO technical committees. Each member body interested in a subject for which a technical committee has been established has the right to be represented on that committee. International organizations, governmental and non-governmental, in liaison with ISO, also take part in the work. ISO collaborates closely with the International Electrotechnical Commission (IEC) on all matters of electrotechnical standardization.

International Standards are drafted in accordance with the rules given in the ISO/IEC Directives, Part 2.

The main task of technical committees is to prepare International Standards. Draft International Standards adopted by the technical committees are circulated to the member bodies for voting. Publication as an International Standard requires approval by at least 75 % of the member bodies casting a vote.

Attention is drawn to the possibility that some of the elements of this document may be the subject of patent rights. ISO shall not be held responsible for identifying any or all such patent rights.

ISO 17712 was prepared by Technical Committee ISO/TC 104, *Freight containers*.

This second edition cancels and replaces the first edition (ISO 17712:2010), which has been technically revised.

SIST Preview
(https://ecommerce.sist.si)

ISO 17712:2013
https://ecommerce.sist.si/catalog/standards/sist/edfc2815-4b66-47f3-957d-79f27d5f4f9e/iso-17712-2013

 © ISO 2013 – All rights reserved

Freight containers — Mechanical seals

1 Scope

This International Standard establishes uniform procedures for the classification, acceptance, and withdrawal of mechanical freight container seals. It provides a single source of information on mechanical seals which are acceptable for securing freight containers in international commerce.

NOTE The purpose of mechanical seals is, as part of a security system, to determine whether a freight container has been tampered with, i.e. whether there has been unauthorized entry into the container through its doors. Seals can be effective only if seal users properly select, store, account for, apply, document, and attend to seals prior to use and in use; while these issues are not addressed in this International Standard, they are relevant to successful use of the seals covered by this International Standard.

Seals that conform to this International Standard are suitable for other applications, such as bulk railcars or truck trailers used in cross-border and domestic operations. Users and regulatory agencies can apply this International Standard to other applications as they deem appropriate.

2 Normative references

The following documents, in whole or in part, are normatively referenced in this document and are indispensable for its application. For dated references, only the edition cited applies. For undated references, the latest edition of the referenced document (including any amendments) applies.

SIST Preview
(https://eecommerce.sist.si)

ISO/IEC 15417, *Information technology — Automatic identification and data capture techniques — Code 128 bar code symbology specification*

ISO/IEC 17020, *Conformity assessment — Requirements for the operation of various types of bodies performing inspection*

https://standards.iteh.ai/catalog/standards/sist/edfc2815-4b66-47f3-957d-79f27d5f4f9e/iso-17712-2013

ISO/IEC 17025, *General requirements for the competence of testing and calibration laboratories*

3 Terms and definitions

For the purposes of this document, the following terms and definitions apply.

3.1 General terms

3.1.1
seal
mechanical device marked with a unique identifier and usually designed for a single use, which is externally affixed to the container doors and designed to evidence tampering or intrusion through the doors of a container and to secure closed doors of a container

Note 1 to entry: Depending on its design and construction, the seal provides varying degrees of resistance to an intentional or unintentional attempt to open it or to enter the freight container through the container doors.

Note 2 to entry: Seals need to be designed and constructed so that tamper attempts create and leave evidence of that tampering.

Note 3 to entry: All grades and types of seals require inspection to indicate whether tampering has occurred or entry has been attempted.

© ISO 2013 – All rights reserved

3.1.2
high-security seal
seal that is constructed and manufactured of material such as metal or metal cable with the intent to delay intrusion

Note 1 to entry: High-security seals can generally be removed with substantial bolt cutters or cable cutters.

3.1.3
security seal
seal that is constructed and manufactured of material that provides limited resistance to intrusion and requires lightweight tools for removal

3.1.4
indicative seal
seal that is constructed and manufactured of material that can easily be broken by hand or by using a simple snipping tool or shear

3.1.5
manufacturer
company or entity that either owns the seal-producing factory or contracts to buy made-to-order seals for resale from a third-party factory

3.1.6
bar code
automatic identification technology that encodes information into an array of parallel bars and spaces of varying widths

SIST Preview
(https://ecommerce.sist.si)

3.1.7
defeated seal
seal which has been opened or removed and replaced or reconstructed without detectable evidence of tampering

ISO 17712:2013
https://ecommerce.sist.si/catalog/standards/sist/edfc2815-4b66-47f3-957d-79f27d5f4f9e/iso-17712-2013

3.1.8
tampering
attempt to open or remove and then replace or reconstruct a seal without leaving detectable evidence of the attempt

3.1.9
tamper evidence
tell-tale indication that an attempt has been made to open or remove and then replace or reconstruct without detectable evidence of that attempt

Note 1 to entry: Examples of tamper evidence include a change in the colour of the material, in surface texture, cracks, indentations, or abrasions. Tamper evident indicators are recognizable by normal examination under the usual circumstances prevailing in practice without technical aids (such as a magnifying glass or microscope).

3.1.10
indicativeness
ability to reveal evidence after attempts have been made to tamper with the seal

3.2 Terms describing different types of mechanical seals

3.2.1
wire seal
length of wire secured in a loop by some type of seizing device

EXAMPLE Wire seals include: crimp wire, fold wire, and cup wire seals.

Note 1 to entry: The seizing device can be plastic or metal and its deformation is one indication of tampering.

© ISO 2013 – All rights reserved

3.2.2
padlock seal
locking body with a bail attached

EXAMPLE Padlock seals include: wire shackle padlock (metal or plastic body), plastic padlock, and keyless padlock seals.

Note 1 to entry: The padlock itself is not an integral part of the freight container.

3.2.3
strap seal
metal or plastic strap secured in a loop by inserting one end into or through a protected (covered) locking mechanism on the other end

Note 1 to entry: The seizing device can be plastic or metal and its deformation is one indication of tampering.

3.2.4
cable seal
cable and a locking mechanism

EXAMPLE On a one-piece seal, the locking or seizing mechanism is permanently attached to one end of the cable. A two-piece cable seal has a separate locking mechanism which slips onto the cable or prefabricated cable end.

3.2.5
bolt seal
metal rod, threaded or unthreaded, flexible or rigid, with a formed head, secured with a separate locking mechanism

SIST Preview
(https://ecommerce.sist.si)

3.2.6
cinch seal
pull-up seal
indicative seal consisting of a thin strip of material, serrated or non-serrated, with a locking mechanism attached to one end

ISO 17712:2013

Note 1 to entry: The free end is pulled through a hole in the locking mechanism and drawn up to the necessary tightness. Cinch or pull-up type seals can have multiple lock positions. These seals are generally made of synthetic materials such as nylon or plastic. They can resemble, but are significantly different from, simple electrical ties.

3.2.7
twist seal
steel rod or heavy-gauge wire of various diameters, which is inserted through the locking fixture and twisted around itself by use of a special tool

3.2.8
scored seal
metal strip which is scored perpendicular to the length of the strip

Note 1 to entry: The strip is passed through the locking fixture and bent at the score mark. Removal of the seal requires bending at the score mark, which results in breakage of the seal.

3.2.9
label seal
frangible seal consisting of a paper or plastic backing with adhesive

Note 1 to entry: The combination of backing and adhesive is chosen to cause the seal to tear when removal is attempted.

3.2.10
barrier seal
designed to provide a significant barrier to container entry

Note 1 to entry: A barrier seal can enclose a portion of the inner locking rods on a container.

Note 2 to entry: Barrier seals can be designed to be reusable.

© ISO 2013 – All rights reserved

4 Seal requirements

4.1 General and environmental

4.1.1 The choice of seal for a specific requirement will depend on many factors. It should be selected after full consideration of the user's performance requirements. The first decision is the appropriate seal classification (indicative, security, or high security), followed by a decision on a particular type, make, and model.

NOTE Selection of a seal presumes the user has already considered the condition of the item to be sealed; some items, such as open rack containers, are not suitable for any seal on the container itself. A seal is only one element in a security system; any seal will only be as good as the system into which it is introduced.

In general terms, a low-strength indicative seal should be used where only indication of entry is desired. Where a physical barrier is a definitive requirement, either a security or high-security seal should be used.

All seals should be easy to fit correctly on the item to be sealed and, once *in situ,* be easy to check for positive engagement of the locking mechanism(s). Correct handling and fitting of seals is at least equal if not greater in importance than selection of the correct seal. A poorly chosen but correctly fitted seal may provide security; however, a well-chosen but incorrectly fitted seal will provide no security.

4.1.2 Security and high-security seals shall be sufficiently durable, strong, and reliable so as to prevent accidental breakage and early deterioration (due to weather conditions, chemical action, vibration, shock, etc.) in normal use.

4.1.3 To preclude the simple removal or loss of a bolt seal by pulling the pin head or locking body through a worn container hasp, the minimum diameter (or minimum widest cross-dimension) for the metal components of a bolt seal shall be 18 mm. This shall be referred to as the "Bolt Seal Diameter Qualification" and it is pass/fail. ISO 17712-compliant bolt seals must pass.

NOTE The seal users who participated in the Working Group for this International Standard were from the international liner shipping industry. They indicated that field personnel experienced recurring problems with 17 mm seals which could be removed intact by pulling the pin head or locking body through worn container hasps. Those members of the Working Group requested that ISO 17712 require an 18 mm minimum diameter for metal parts of bolt seals.

4.1.4 All classes of seals shall be capable of being affixed easily and quickly.

4.1.5 Container seals are typically subjected to the harsh environments of the marine, rail, and road transportation industries. Sand and dust, salt spray, grease, snow, ice, and grime can be expected to coat the seal. Physical shock and vibration are commonly encountered as a result of handling and transport operations. ISO 18185-3, Freight containers — Electronic seals — Part 3: Environmental characteristics, provides an excellent description of the harsh environment that applies to mechanical seals as well as electronic seals. ISO 18185-3 also provides useful guidelines that are generally applicable to mechanical seals. Mechanical seals shall be constructed to be fit for their intended purposes.

4.1.6 Indicative, security, and high-security seals shall be fit for use in the environmental conditions to which maritime containers may be exposed.

4.2 Marking

4.2.1 Seals shall be identified by unique marks (such as a logotype) and unique numbers that are readily legible; markings intended for unique identification of the seal shall be considered permanent. All seals shall be uniquely numbered and identified. The identity of the manufacturer or private label holder shall be evident on every seal, either name or logo.

© ISO 2013 – All rights reserved

4.2.2 Seals meeting the relevant criteria shall be marked or stamped in a readily legible way to identify their classification as indicative ("I"), security ("S"), or high-security ("H") seals. Any modification of markings shall require obvious irreversible physical, chemical, heat, or other damage to or destruction of the seal.

4.2.3 Manufacturers or distributors shall not affix such classification marks unless the conditions in 4.2.3.a and 4.2.3.b are met.

a) The seal shall meet the appropriate physical parameters in this International Standard, as certified by an accredited testing facility [A.3.3 a)].

b) The firm that manufactures the seal complies with the security-related practices described in Annex A, as certified by an accredited process review organization (A.3.2).

c) Furthermore, for a seal to be affixed the "H" mark, it shall be designed and constructed with tamper evidence features that generate tell-tale evidence of tampering, as documented in a compliance certification letter and the audit report by an accredited process review organization.

4.2.4 In the case of reusable devices, the seal number should be carried on the portion designed to be cut off so as to preclude its reuse.

4.2.5 Seals shall be marked and constructed in such a manner that manufacturers shall be able to identify their own products.

4.2.6 Manufacturers may add a machine-readable bar code to their seals. The bar code shall represent the unique identification numbers as reflected in 4.2.1. Bar codes, if used, shall comply with customer specifications; or, in the absence of a contrary customer specification, the manufacturer shall comply with ISO/IEC 15417, which addresses Code 128 bar code symbology specification.

SIST ISO 17712:2013
(https://ecommerce.sist.si)

4.3 Identification marks

ISO 17712:2013
https://standards.iteh.ai/catalog/standards/sist/1ed3-957d-79f27d5f4f9e/iso-17712-2013

Regulatory authorities and private customers may require identifiers that go beyond the requirements of this International Standard, such as in the following cases.

a) Seals intended for use on freight containers moving under customs laws shall be approved or accepted and individually marked as determined by the relevant customs organization or competent authority.

b) If the seal is to be purchased and used by customs, the seal or fastening, as appropriate, shall be marked to show that it is a customs seal by application of unique words or markings designated by the customs organization in question and a unique identification number.

c) If the seal is to be used by private industry (i.e. a shipper, manufacturer, or carrier), it shall be clearly and legibly marked and uniquely numbered and identified. It may also be marked with a company name or logo.

4.4 Evidence of tampering

4.4.1 Seals shall be designed and constructed so that tamper attempts create and leave evidence of that tampering. More specifically, seals shall be designed and manufactured to prevent removal of or undoing the seal without breaking, or tampering without leaving clear visible evidence, or undetectable re-application of seals designed for single use. Compliant high-security "H" seals shall demonstrate their ability to resist such tamper attempts as documented in a certification letter and audit report regarding the seal manufacturer by an accredited process review organization in accordance with Clause 6 and Normative Annex A. Such documentation shall, upon request, be made available to competent governmental agencies or authorities and to *bona fide* private seal users.

© ISO 2013 – All rights reserved

4.4.2 Seals constructed with plastic coating over metal components shall have sufficiently thick metal components so as to preclude removal of the plastic coating, opening of the seal, and re-closing of the seal without leaving visual evidence of tampering.

4.4.3 Different seal types evidence tampering in different ways. It is recommended that users receive training in seal inspection and detection of tampering.

NOTE 1 A useful field and training guide for inspecting seals and detecting tampering is ASTM F1158 "Standard guide for inspection and evaluation of tampering of security seals."

NOTE 2 Table 5 provides useful examples of tampering evidence.

5 Testing for seal classification

5.1 General

5.1.1 There are four physical test procedures: tensile, shear, bending, and impact. The impact procedure is performed twice at different temperatures. Five samples shall be evaluated for each of the five tests. A total of 25 samples are needed to complete the testing necessary to classify a seal as indicative, security, or high security.

The lowest classification for any sample on any test shall define the classification for the seal being evaluated. To achieve a given classification, all samples must meet the requirements for that classification in all five tests.

NOTE The terms indicative, security, and high security refer to the barrier capabilities of the seal (respectively, minimal, medium, and meaningful barrier strength). [Since indicative seals, by definition, 'can easily be broken by hand' (3.1.4), indicative seals do not need to be subjected to the strength tests in Clause 5.] The classification names do not imply any differences in security against tampering.

5.1.2 Testing is to be done once every two years as set forth in A.3.3 a) unless more frequent testing is required by the competent authority or there is a meaningful modification in the design or material specifications of the seal.

Seals shall be tested as sold. Test samples shall be selected at random from inventory available for sale.

The general type of seal and its configuration shall be used to determine the appropriate attachment to the test fixture.

Manufacturers shall submit all relevant products to an accredited independent testing laboratory to ensure that the product complies with Clause 5. The testing lab shall be accredited according to ISO/IEC 17025 with an explicit scope that includes this International Standard.

5.2 Tensile test

A pull test shall be conducted to determine the strength of a seal's locking mechanism. The test fixture shall apply a uniform load to the seal in a manner that simulates reversal of the motion used to lock the seal. The load shall be slowly applied until the seal forcibly opens or is otherwise broken. For all seals, pulling speed must be (50,8 ± 25,4) mm/min.

The seal shall be classified according to the criteria in Table 1 based on the tensile force recorded at the time of seal failure.

Figures 1 to 5 illustrate the apparatuses for conducting tensile tests; Figures 1 to 4 are required while Figure 5 is suggested.

All tests should be carried out at a temperature of (18 ± 3) °C.

© ISO 2013 – All rights reserved

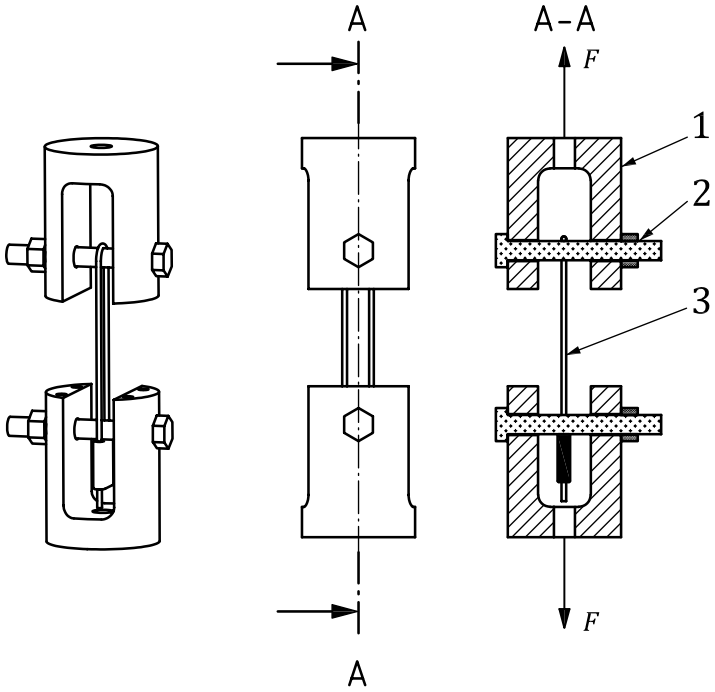

Key

1 shackle fixture: steel, case hardening depth 0,7 mm

2 seal support bolt and nut: steel, Class 10.9, see Notes 2, 3, and 4

3 seal location

F applied tensile force

SIST Preview
(https://ecommerce.sist.si)

NOTE 1 The same seal support fixture is used for the tensile test and the impact test. This seal support fixture (and the bolt seal support fixture in Figure 2) fits into the complete apparatus shown in Figure 11.

ISO 17712:2013

NOTE 2 Seal support bolt diameter 6,35 mm (0,25 inches) for seals with smallest cross-sectional dimension less than or equal to 3,18 mm (0,125 inches).

NOTE 3 Seal support bolt diameter 12,7 mm (0,5 inches) for seals with smallest cross-sectional area greater than 3,18 mm (0,125 inches).

NOTE 4 Tolerance ± 0,254 mm (0,010 inches).

Figure 1 — Tensile test apparatus — Wire seal, strap seal, cable seal, cinch seal

© ISO 2013 – All rights reserved

Dimensions in millimetres

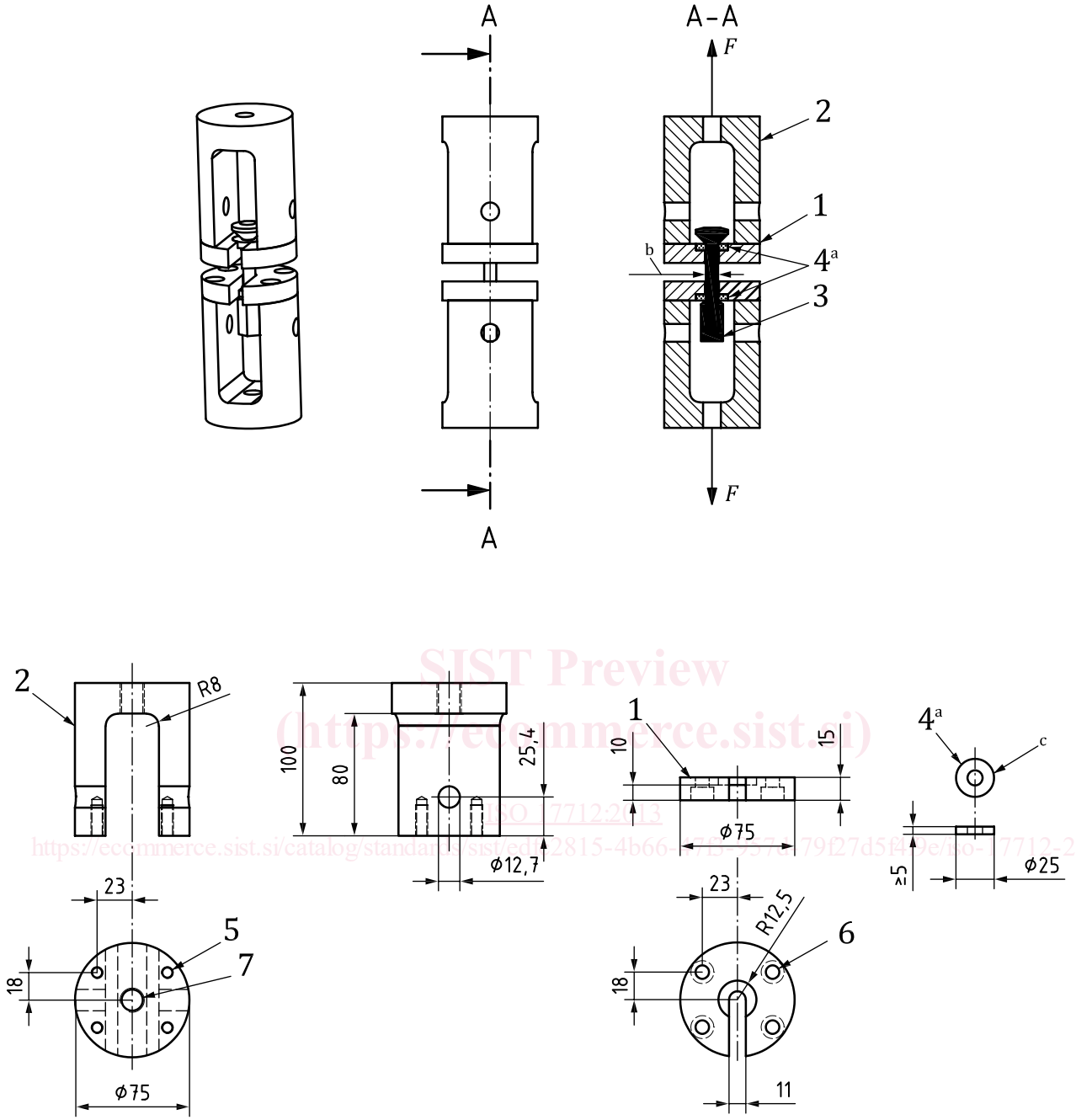

SIST Preview
(https://ecommerce.sist.si)
ISO 17712:2013
https://ecommerce.sist.si/catalog/standards/sist/ed...2815-4b66-...79f27d5f49e/iso-17712-2013

Key

1 bolt seal support: steel, case hardening depth 0,7 mm
2 shackle fixture: steel, case hardening depth 0,7 mm
3 bolt seal location
4 2 × bolt seal support washer: steel, case hardening depth 0,7 mm
5 4 × thread M8 × 1 mm, 20 mm deep
6 4 × counterbore for M8 × 1 mm
7 1 × thread M16 × 1,5 mm thru
F applied tensile force

[a] The bolt seal support washer (4) thickness may be increased to allow seal clearance but shall not be less than 5 mm.

[b] Cross-section dimension

[c] 5 % to 10 % larger than the largest cross-section of the bolt seal shaft

© ISO 2013 – All rights reserved