INTERNATIONAL STANDARD

ISO 4624

Third edition
2016-03-01

Paints and varnishes — Pull-off test for adhesion

Peintures et vernis — Essai de traction

SIST Preview
(https://ecommerce.sist.si)

ISO 4624:2016
https://ecommerce.sist.si/catalog/standards/sist/fba46391-1255-4ae3-96dc-d3fffcea8122/iso-4624-2016

Reference number
ISO 4624:2016(E)

© ISO 2016

SIST Preview
(https://ecommerce.sist.si)

ISO 4624:2016
https://ecommerce.sist.si/catalog/standards/sist/fba46391-1255-4ae3-96dc-d3fffcea8122/iso-4624-2016



COPYRIGHT PROTECTED DOCUMENT

© ISO 2016, Published in Switzerland

All rights reserved. Unless otherwise specified, no part of this publication may be reproduced or utilized otherwise in any form or by any means, electronic or mechanical, including photocopying, or posting on the internet or an intranet, without prior written permission. Permission can be requested from either ISO at the address below or ISO's member body in the country of the requester.

ISO copyright office
Ch. de Blandonnet 8 • CP 401
CH-1214 Vernier, Geneva, Switzerland
Tel. +41 22 749 01 11
Fax +41 22 749 09 47
copyright@iso.org
www.iso.org

 © ISO 2016 – All rights reserved

Contents

Page

Foreword ..... **iv**
Introduction ..... **v**
1 Scope **1**
2 Normative references **1**
3 Principle **1**
4 Apparatus **2**
5 Adhesives **4**
6 Sampling **4**
7 Test panels **5**
7.1 Substrate 5
7.2 Preparation and coating 5
7.3 Drying and conditioning 5
7.4 Thickness of coating 5
8 Procedure **5**
8.1 Number of determinations 5
8.2 Ambient conditions 5
8.3 Adhesive 5
8.4 Test assemblies 5
8.4.1 Method A: General method (using two dollies) for testing both rigid and deformable substrates 5
8.4.2 Method B: Method for testing from one side only, using a single dolly (suitable for rigid substrates only) 6
8.4.3 Method C: Method using dollies, one as a painted substrate 7
8.5 Measurement 7
8.5.1 Breaking strength 7
8.5.2 Nature of the fracture 8
9 Calculation and expression of results **8**
9.1 Breaking strength 8
9.2 Nature of failure 9
9.3 Example 9
10 Precision **9**
11 Test report **9**
Bibliography **11**

SIST Preview
(https://ecommerce.sist.si)
ISO 4624:2016
https://ecommerce.sist.si/catalog/sist/cdf4e46391-1255-4ae3-96dc-d3fffcea8122/iso-4624-2016

© ISO 2016 – All rights reserved

Foreword

ISO (the International Organization for Standardization) is a worldwide federation of national standards bodies (ISO member bodies). The work of preparing International Standards is normally carried out through ISO technical committees. Each member body interested in a subject for which a technical committee has been established has the right to be represented on that committee. International organizations, governmental and non-governmental, in liaison with ISO, also take part in the work. ISO collaborates closely with the International Electrotechnical Commission (IEC) on all matters of electrotechnical standardization.

The procedures used to develop this document and those intended for its further maintenance are described in the ISO/IEC Directives, Part 1. In particular the different approval criteria needed for the different types of ISO documents should be noted. This document was drafted in accordance with the editorial rules of the ISO/IEC Directives, Part 2 (see www.iso.org/directives).

Attention is drawn to the possibility that some of the elements of this document may be the subject of patent rights. ISO shall not be held responsible for identifying any or all such patent rights. Details of any patent rights identified during the development of the document will be in the Introduction and/or on the ISO list of patent declarations received (see www.iso.org/patents).

Any trade name used in this document is information given for the convenience of users and does not constitute an endorsement.

For an explanation on the meaning of ISO specific terms and expressions related to conformity assessment, as well as information about ISO's adherence to the WTO principles in the Technical Barriers to Trade (TBT) see the following URL: Foreword - Supplementary information

SIST Preview
(https://ecommerce.sist.si)

The committee responsible for this document is ISO/TC 35, *Paints and varnishes*, Subcommittee SC 9, *General test methods for paints and varnishes*.

This third edition cancels and replaces the second edition (ISO 4624:2002), which has been technically revised with the following changes:

ISO 4624:2016
https://ecommerce.sist.si/catalog/standards/sist/fba46391-1255-4ae3-96dc-d3fffcea8122/iso-4624-2016

a) detailed information on how to avoid distortion of the substrate during the tensile test has been added;

b) the three methods using one dolly or two dollies on a painted panel and two dollies, one as painted substrate, have been named methods A, B and C;

c) the supplementary test conditions previously in Annex A have been integrated in the test report.

 © ISO 2016 – All rights reserved

Introduction

This International Standard is one of two standards which describe methods for assessing the adhesion of a single coating or a multi-coat system of paint, varnish or related product by measuring the minimum tensile stress necessary to detach or to rupture the coating in a direction perpendicular to the substrate.

The test result is influenced not only by the mechanical properties of the system under test, but also by the nature and preparation of the substrate, the method of paint application, the drying conditions of the coating, the temperature, the humidity and other factors like the type of test instrument which has been used.

One other International Standard for the evaluation of adhesion characteristics is ISO 2409.

SIST Preview
(https://ecommerce.sist.si)
ISO 4624:2016
https://ecommerce.sist.si/catalog/standards/sist/fba46391-1255-4ae3-96dc-d3fffcea8122/iso-4624-2016

© ISO 2016 – All rights reserved

SIST Preview
(https://ecommerce.sist.si)

ISO 4624:2016
https://ecommerce.sist.si/catalog/standards/sist/fba46391-1255-4ae3-96dc-d3fffcea8122/iso-4624-2016

Paints and varnishes — Pull-off test for adhesion

1 Scope

This International Standard specifies three methods (i.e. one dolly or two dollies on a painted panel and two dollies, one as painted substrate) for determining the adhesion by carrying out a pull-off test on a single coating or a multi-coat system of paint, varnish or related product.

These test methods have been found useful in comparing the adhesion behaviour of different coatings. It is most useful in providing relative ratings for a series of coated panels exhibiting significant differences in adhesion.

The test may be applied using a wide range of substrates. Different procedures are given according to whether the substrate is deformable, for example thin metal, plastics and wood, or rigid, for example thick concrete and metal plates. To avoid distortion of the substrate during the tensile test, it is common to use a sandwich construction. For example, for special purposes, the coating may be applied directly to the face of a test dolly.

2 Normative references

The following documents, in whole or in part, are normatively referenced in this document and are indispensable for its application. For dated references, only the edition cited applies. For undated references, the latest edition of the referenced document (including any amendments) applies.

SIST Preview
(https://ecommerce.sist.si)

ISO 1513, *Paints and varnishes — Examination and preparation of test samples*

ISO 1514, *Paints and varnishes — Standard panels for testing*

ISO 4624:2016
https://standards.iteh.ai/catalog/standards/sist/[illegible]96dc-d3fffcea8122/iso-4624-2016

ISO 2808, *Paints and varnishes — Determination of film thickness*

ISO 3270, *Paints and varnishes and their raw materials — Temperatures and humidities for conditioning and testing*

ISO 15528, *Paints, varnishes and raw materials for paints and varnishes — Sampling*

3 Principle

The product or system under test is applied at uniform thickness to flat panels of uniform surface texture.

After drying/curing the coating system, dollies are bonded directly to the surface of the coated, cured panel using an adhesive.

After curing of the adhesive, the bonded dolly assemblies are placed in a suitable tensile tester. The bonded assemblies are subjected to a controlled tensile test (pull-off test), and the force required to break the coating/substrate bond is measured.

To avoid possible distortion of the substrate during the tensile test, dollies with a diameter smaller than the 2 cm diameter used for steel substrates may be used to reduce the force introduced.

The test result is the tensile stress necessary to break the weakest interface (adhesive failure) or the weakest component (cohesive failure) of the test assembly. Mixed adhesive/cohesive failures may also occur.

© ISO 2016 – All rights reserved

4 Apparatus

4.1 Tensile tester, suitable for carrying out the chosen procedure specified in Clause 8. The tensile stress shall be applied in a direction perpendicular to the plane of the coated substrate and shall be increased at a substantially uniform rate, not greater than 1 MPa/s[1)] such that failure of the test assembly occurs within 90 s. Suitable designs for applying the tensile stress are shown in Figures 1 and 2.

Instead of a tensile tester, other types of pull-off adhesion testers (mechanically, pneumatically, hydraulically or hand-driven) may be used provided that they give similar results. The type of instrument shall be reported in the test report, because hand-driven/mechanical/hydraulic instruments are reported to produce widely different results.

NOTE The results can be influenced by the test assembly used. Furthermore, the results are not reproducible unless coaxial alignment of the tensile forces is ensured.

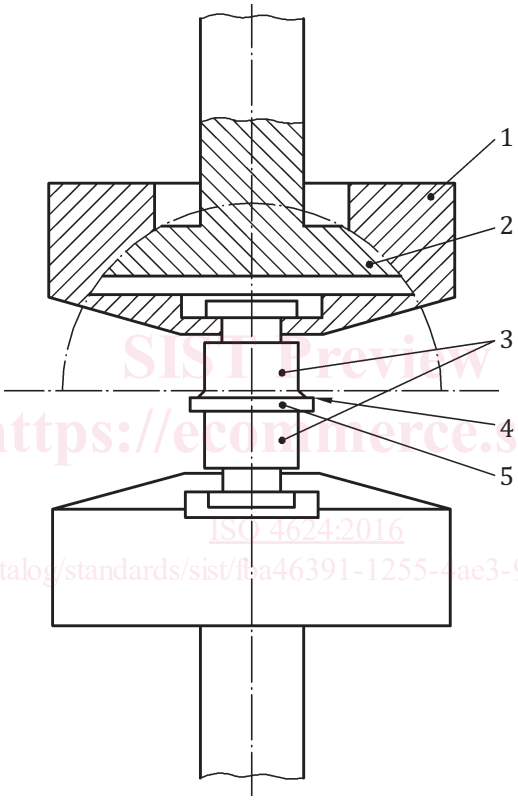

SIST Preview
(https://ecommerce.sist.si)
ISO 4624:2016
https://ecommerce.sist.si/catalog/standards/sist/f5a46391-1255-4ae3-96dc-d3fffcea8122/iso-4624-2016

Key

1 support
2 ball joint
3 dollies
4 coating
5 substrate

Figure 1 — Example of a suitable test apparatus for the two-dolly methods described in 8.4.1 and 8.4.3 (methods A and C)

1) 1 MPa/s = 1 MN/(m^2·s).

© ISO 2016 – All rights reserved

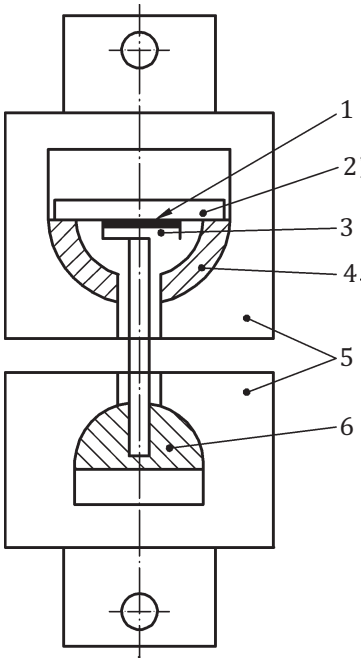

Key

1 coating
2 test piece
3 dolly
4 ball-and-socket sliding joint
5 support (suitably designed to allow for joint assembly)
6 ball-and-socket sliding joint

SIST Preview
(https://ecommerce.sist.si)

Figure 2 — Example of a suitable test apparatus for the one-dolly method described in 8.4.2 (method B)

ISO 4624:2016
https://ecommerce.sist.si/catalog/standards/sist/fba...4ae3-96dc-d3fffcea8122/iso-4624-2016

4.2 Test dollies, each consisting of a steel or aluminium cylindrical-faced testing body, specifically designed to be used with the tensile tester. Each dolly has a rigid, flat face for bonding the adhesive/coating at one end and a facility for connecting the pull-off tester at the other. Each dolly has a nominal diameter of 20 mm (see, however, following paragraph) and sufficient thickness to ensure freedom from distortion during the test. It is recommended that the length of each dolly is not less than half its diameter. The faces of each dolly shall be machined perpendicular to its axis before use.

Dollies with a diameter of, for example, 7 mm may be used when the method for testing adhesion from one side only is used and when there is a danger of distortion of the substrate (see 8.4.2). If dollies smaller in diameter are used, more measurements shall be made to improve the precision. When using 7 mm dollies, 10 measurements have been shown to be practicable. The diameter of the dollies shall be reported in the test report.

4.3 Centering device, for ensuring proper coaxial alignment of the test assembly during the adhesion process of the two-dolly methods described in 8.4.1 (method A) and 8.4.3 (method C). A suitable design is shown in Figure 3.

4.4 Cutting device, such as a sharp knife, for cutting through cured adhesive and the paint coating to the substrate, round the circumference of the dolly.

Depending on the mechanical properties of the paint system (e.g. brittleness), cutting through the cured adhesive and the paint film to the substrate can have a big influence on the adhesion of the paint system. It is permitted, if specified or agreed between the interested parties, not to cut when the paint

© ISO 2016 – All rights reserved

systems are less than 150 µm in layer thickness. If cuts around the dolly have been made, this shall be mentioned in the test report and the type of cutting tool shall also be mentioned.

When using small dollies, cutting often is difficult and is normally not carried out. Experience has shown that an increasing number of small dollies has an advantage concerning precision compared to the cut combined with the 20 mm dollies.

Dimensions in millimetres

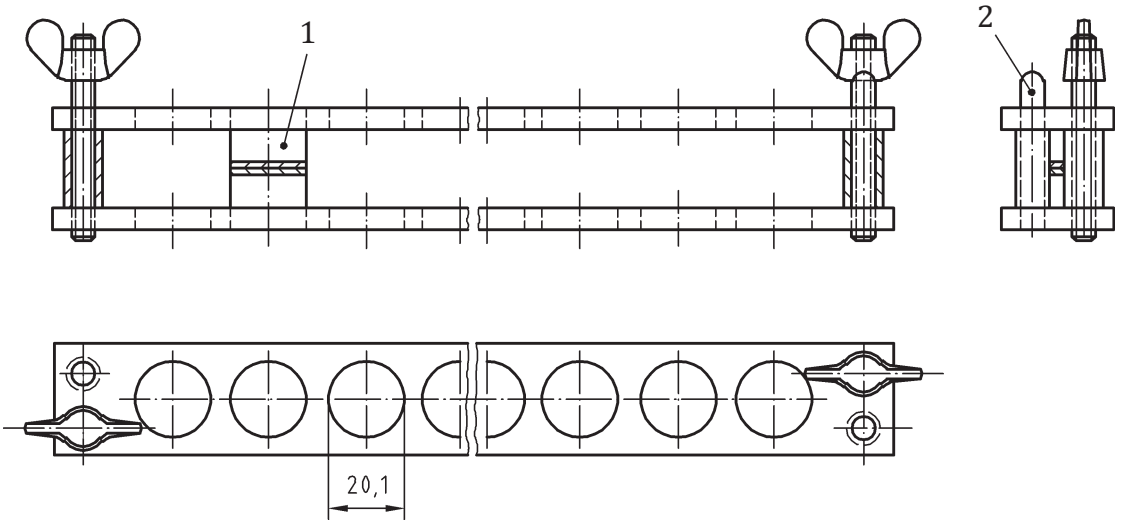

Key

1 test assembly aligned for adhesion process (see 4.3)

2 centering pin

SIST Preview
(https://ecommerce.sist.si)

Figure 3 — Example of a suitable centering device for 20 mm-diameter dollies

ISO 4624:2016
https://ecommerce.sist.si/catalog/standards/sist/fba46391-1255-4ae3-96dc-d3fffcea8122/iso-4624-2016

5 Adhesives

Special attention is required in selecting suitable adhesives to be used in the test. To produce failure of the coating, it is essential that the cohesive and bonding properties of the adhesive are greater than those of the coating under test.

Preliminary screening of adhesives shall be carried out in order to determine their suitability for use. Suitable adhesives and, if applicable, their unmixed components shall cause little or no visible change in the coating under test when left in contact with the coating for a period equivalent to the curing time of the adhesive.

Adhesives which give the highest results, which means the most coating-substrate adhesive failure or coating failure, are preferred.

In most cases, cyanoacrylate, two-component solventless epoxide and peroxide-catalysed polyester adhesives have been found suitable. In special tests under highly humid conditions, the curing time of the adhesive should be as short as possible. The use of two-pack quick-drying epoxy adhesive is preferable in these situations.

Where failure is mainly associated with the adhesive at tensions less than 5 MPa, the use of another type of adhesive may enable more useful results to be obtained.

6 Sampling

Take a representative sample of the product to be tested (or of each product in case of a multi-coat system), as specified in ISO 15528.

© ISO 2016 – All rights reserved