SLOVENSKI STANDARD
SIST EN 12697-23:2018

01-januar-2018

Nadomešča:

SIST EN 12697-23:2004

Bitumenske zmesi - Preskusne metode - 23. del: Ugotavljanje posredne natezne trdnosti bitumenskih preskušancev

Bituminous mixtures - Test methods - Part 23: Determination of the indirect tensile strength of bituminous specimens

Asphalt - Prüfverfahren - Teil 23: Bestimmung der indirekten Zugfestigkeit von Asphalt-Probekörpern

Mélanges bitumineux - Méthode d'essais - Partie 23: Détermination de la résistance à la traction indirecte des éprouvettes bitumineuses

SIST Preview
(https://ecommerce.sist.si)
SIST EN 12697-23:2018
https://ecommerce.sist.si/catalog/standards/sist/fd422005-7b22-4b26-acff-08177e2ac94e/sist-en-12697-23-2018

Ta slovenski standard je istoveten z: EN 12697-23:2017

ICS:

93.080.20 Materiali za gradnjo cest Road construction materials

SIST EN 12697-23:2018 en,fr,de

2003-01.Slovenski inštitut za standardizacijo. Razmnoževanje celote ali delov tega standarda ni dovoljeno.

SIST EN 12697-23:2018

SIST Preview
(https://ecommerce.sist.si)

SIST EN 12697-23:2018
https://ecommerce.sist.si/catalog/standards/sist/fd422005-7b22-4b26-acff-08177e2ac94e/sist-en-12697-23-2018

SIST EN 12697-23:2018

EUROPEAN STANDARD

NORME EUROPÉENNE

EUROPÄISCHE NORM

EN 12697-23

November 2017

ICS 93.080.20

Supersedes EN 12697-23:2003

English Version

Bituminous mixtures - Test methods - Part 23: Determination of the indirect tensile strength of bituminous specimens

Mélanges bitumineux - Méthode d'essais - Partie 23 : Détermination de la résistance à la traction indirecte des éprouvettes bitumineuses

Asphalt - Prüfverfahren - Teil 23: Bestimmung der indirekten Zugfestigkeit von Asphalt-Probekörpern

This European Standard was approved by CEN on 28 August 2017.

CEN members are bound to comply with the CEN/CENELEC Internal Regulations which stipulate the conditions for giving this European Standard the status of a national standard without any alteration. Up-to-date lists and bibliographical references concerning such national standards may be obtained on application to the CEN-CENELEC Management Centre or to any CEN member.

This European Standard exists in three official versions (English, French, German). A version in any other language made by translation under the responsibility of a CEN member into its own language and notified to the CEN-CENELEC Management Centre has the same status as the official versions.

SIST Preview
(https://ecommerce.sist.si)

CEN members are the national standards bodies of Austria, Belgium, Bulgaria, Croatia, Cyprus, Czech Republic, Denmark, Estonia, Finland, Former Yugoslav Republic of Macedonia, France, Germany, Greece, Hungary, Iceland, Ireland, Italy, Latvia, Lithuania, Luxembourg, Malta, Netherlands, Norway, Poland, Portugal, Romania, Serbia, Slovakia, Slovenia, Spain, Sweden, Switzerland, Turkey and United Kingdom.

https://ecommerce.sist.si/catalog/standards/sist/fd422005-7b22-4b26-acff-08177e2ac94e/sist-en-12697-23-2018

EUROPEAN COMMITTEE FOR STANDARDIZATION
COMITÉ EUROPÉEN DE NORMALISATION
EUROPÄISCHES KOMITEE FÜR NORMUNG

CEN-CENELEC Management Centre: Avenue Marnix 17, B-1000 Brussels

© 2017 CEN All rights of exploitation in any form and by any means reserved worldwide for CEN national Members.

Ref. No. EN 12697-23:2017 E

SIST EN 12697-23:2018

Contents

Page

European Foreword ... 3
1 Scope ... 4
2 Normative references ... 4
3 Terms and definitions ... 4
4 Principle ... 5
5 Apparatus ... 5
5.1 Compression testing machine ... 5
5.2 Testing head with loading strips ... 5
Table 1 — Requirements for loading strips ... 5
Figure 1 — Testing head with loading strips and test specimen ... 6
5.3 Measuring device ... 6
5.4 Water bath ... 6
5.5 Soft plastic bags ... 6
6 Sample preparation ... 6
6.1 Number of specimen ... 6
6.2 Dimensions of test specimen ... 6
6.3 Visual examination ... 7
6.4 Measurement of dimensions ... 7
6.5 Age of Specimen ... 7
7 Conditioning ... 7
7.1 Thermal treatment ... 7
7.2 Storage ... 7
8 Test temperature ... 8
9 Test procedure ... 8
Figure 2 — Types of failure ... 8
10 Calculation ... 9
11 Test report ... 9
12 Precision ... 9

SIST Preview
(https://ecommerce.sist.si)
SIST EN 12697-23:2018
https://e... ...ht.si/catalog/standards/sist/fd422005-7b22-4b26-acff-08177e2ac94e/sist-en-12697-23-2018

SIST EN 12697-23:2018

European Foreword

This document (EN 12697-23:2017) has been prepared by Technical Committee CEN/TC 227 "Road materials", the secretariat of which is held by DIN.

This European Standard shall be given the status of a national standard, either by publication of an identical text or by endorsement, at the latest by May 2018, and conflicting national standards shall be withdrawn at the latest by May 2018.

Attention is drawn to the possibility that some of the elements of this document may be the subject of patent rights. CEN shall not be held responsible for identifying any or all such patent rights.

This document supersedes EN 12697-23:2003.

The following is a list of significant technical changes since the previous edition:

— the series title no longer makes the method exclusively for hot mix asphalt;

— EN 12697-12 deleted as Normative reference, including any references to EN 12697-12 in this test method;

— [5.2] addition of device for test specimen with diameter 80 mm and 120 mm;

— [5.2] Table 1 and Table 2 merged into one Table 1;

— [6.2] addition of tolerances on diameter for specimens with diameter 80 mm and 120 mm;

— [6.2] addition of maximum aggregate size for specimens with diameter 80 mm and 120 mm;

— [6.5] introduction of requirements for specimen age;

— [8] test temperature set to + 10 °C but opened by references from other standards;

— [10] unit for ITS amended to kilopascals (kPa). Formula corrected accordingly;

— [11] bullet g). Unit amended to kilopascals (kPa).

According to the CEN-CENELEC Internal Regulations, the national standards organisations of the following countries are bound to implement this European Standard: Austria, Belgium, Bulgaria, Croatia, Cyprus, Czech Republic, Denmark, Estonia, Finland, Former Yugoslav Republic of Macedonia, France, Germany, Greece, Hungary, Iceland, Ireland, Italy, Latvia, Lithuania, Luxembourg, Malta, Netherlands, Norway, Poland, Portugal, Romania, Serbia, Slovakia, Slovenia, Spain, Sweden, Switzerland, Turkey and the United Kingdom.

SIST Preview
(https://ecommerce.sist.si)
SIST EN 12697-23:2018
https://ecommerce.sist.si/catalog/standards/sist/8122005-7b22-4b26-acff-08177e2ac94e/sist-en-12697-23-2018

SIST EN 12697-23:2018

1 Scope

This European Standard specifies a test method for determining the (splitting) indirect tensile strength of cylindrical specimens of bituminous mixtures.

2 Normative references

The following documents, in whole or in part, are normatively referenced in this document and are indispensable for its application. For dated references, only the edition cited applies. For undated references, the latest edition of the referenced document (including any amendments) applies.

EN 12697-27, *Bituminous mixtures - Test methods - Part 27: Sampling*

EN 12697-29, *Bituminous mixtures - Test method for hot mix asphalt - Part 29: Determination of the dimensions of a bituminous specimen*

EN 12697-30, *Bituminous mixtures - Test methods for hot mix asphalt - Part 30: Specimen preparation by impact compactor*

EN 12697-31, *Bituminous mixtures - Test methods for hot mix asphalt - Part 31: Specimen preparation by gyratory compactor*

EN 12697-32, *Bituminous mixtures — Test methods for hot mix asphalt — Part 32: Laboratory compaction of bituminous mixtures by vibratory compactor*

EN 12697-33, *Bituminous mixtures — Test methods for hot mix asphalt — Part 33: Specimen prepared by roller compactor*

EN 12697-34, *Bituminous mixtures - Test methods for hot mix asphalt - Part 34: Marshall test*

SIST Preview
(https://ecommerce.sist.si)
https://ecommerce.sist.si/catalog/standards/sist/fd422005-7b22-4b26-acff-08177e2ac94e/sist-en-12697-23-2018

3 Terms and definitions

For the purposes of this document, the following terms and definitions apply.

3.1
indirect tensile strength
ITS
maximum tensile stress calculated from the peak load applied to a cylindrical specimen loaded diametrically until break at specified test conditions

3.2
cylindrical specimen
laboratory-made (e.g. gyratory or impact-compacted) cylindrical moulded specimen or core taken from a bituminous layer or slab

SIST EN 12697-23:2018

4 Principle

The cylindrical specimen to be tested is brought to the specified test temperature, placed in the compression testing machine between the loading strips, and loaded diametrically along the direction of the cylinder axis with a constant speed of displacement until it breaks. The indirect tensile strength is the maximum tensile stress calculated from the peak load applied at break and the dimensions of the specimen.

5 Apparatus

5.1 Compression testing machine

Compression testing machine, Marshall-type conforming to EN 12697-34, or similar apparatus, having a recommended minimum capacity of 28 kN and capable of applying loads to test specimens at a constant rate of deformation of (50 ± 2) mm/min after a transitory period less than 20 % of the loading time. The rate of deformation shall be maintained.

When the test is conducted at low temperatures, on stiff asphalt samples as/or on specimens with diameter of 150 mm or 160 mm, the loading capacity of 28 kN may not be sufficient in order to reach the indirect tensile strength. In these cases, test devices of higher load capacity can be used.

5.2 Testing head with loading strips

Testing head for indirect tensile strength test equipped with loading strips of hardened steel having a concave surface with a radius of curvature corresponding to the nominal radius of the specimen (see Figure 1).

Loading strips for testing of cylindrical specimens shall have a radius of curvature fitting the specimen under test and a width as shown in Table 1.

SIST Preview
(https://ecommerce.sist.si)
SIST EN 12697-23:2018
https://ecommerce.sist.si/catalog/standards/sist/fd422005-7b22-4b26-acff-08177e2ac94e/sist-en-12697-23-2018

Table 1 — Requirements for loading strips

	Dimensions mm				
Specimen diameter (mm)	80 ± 2	100 ± 3	120 ± 3	150 ± 3	160 ± 3
Loading strip width, W (mm)	10,2 ± 0,1	12,7 ± 0,2	15,2 ± 0,2	19,1 ± 0,2	20,0 ± 0,2
Maximum height difference at the curved side of the loading strip, h (mm)	0,33	0,40	0,48	0,61	0,63

Dimensions for the curved side are not exactly specified as narrow tolerances could require loading strip replacement after very few tests. As the importance of exactly fitting loading strips is not considered essential, slightly larger curvature of loading strips may ease the specimen placement.

The loading strips shall have a length of at least equal to the height of the specimen to be tested.

It is recommended that the edges of the loading strips are rounded by grinding to remove the sharp edges in order not to cut the sample during testing.

The upper testing head shall be guided to ensure a parallel movement of the loading strips.

The upper head may be carried by a spring just capable of carrying the head to facilitate the handling of the device.

SIST EN 12697-23:2018

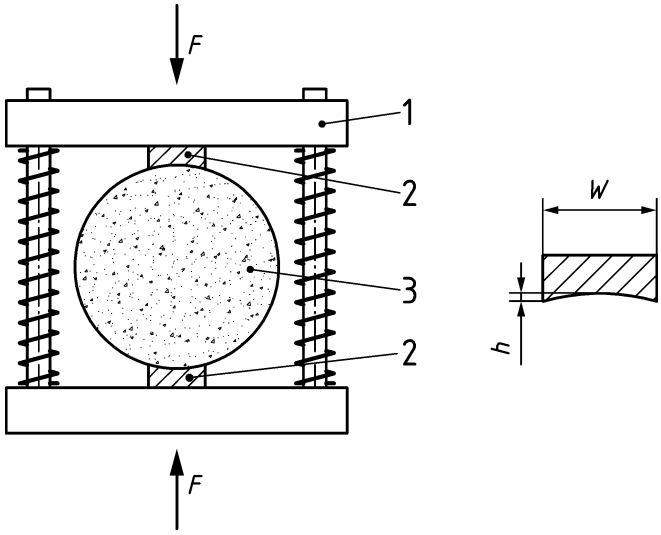

Key

1 testing head
2 loading strips
3 specimen
W Width of the loading strip
h Maximum height difference at the curved side of the loading strip
F load

Figure 1 — Testing head with loading strips and test specimen

SIST Preview
(https://ecommerce.sist.si)
SIST Preview
(https://ecommerce.sist.si)
SIST EN 12697-23:2018
https://ecommerce.sist.si/catalog/standards/sist/fd422005-7b22-4b26-acff-08177e2ac94e/sist-en-12697-23-2018
SIST EN 12697-23:2018
https://ecommerce.sist.si/catalog/standards/sist/fd422005-7b22-4b26-acff-08177e2ac94e/sist-en-12697-23-2018

5.3 Measuring device

Measuring device capable of determining load to an accuracy of ± 0,2 kN.

5.4 Water bath

Water bath, thermostatically controlled, or air chamber, capable of maintaining the test temperature as selected according to 8 with an accuracy of ± 1 °C in the vicinity of the sample.

5.5 Soft plastic bags

Soft plastic bags or other suitable devices for watertight protection of specimens (only required for water bath conditioning).

6 Sample preparation

6.1 Number of specimen

At least three specimens shall be prepared for each sample and condition tested.

6.2 Dimensions of test specimen

The cylindrical test specimens shall have a diameter of (80 ± 2) mm, (100 ± 3) mm, (120 ± 3) mm, (150 ± 3) mm or (160 ± 3) mm.

SIST EN 12697-23:2018

For specimens with:

— 80 mm nominal diameter, the maximum aggregate size of the bituminous mixture shall not exceed 11 mm;

— 100 mm nominal diameter, the maximum aggregate size shall not exceed 22 mm;

— 120 mm nominal diameter, the aggregate size shall not exceed 31,5 mm;

— 150 mm and 160 mm nominal diameter, the maximum aggregate size shall not exceed 40 mm.

The specimens shall be cylindrical moulded specimens, laboratory-produced in accordance with EN 12697-30, EN 12697-31 or EN 12697-32, or cores taken from a bituminous slab produced in accordance with EN 12697-33, or cores taken from a bituminous layer in accordance with EN 12697-27.

The specimens shall (unless otherwise specified) have a height of between 35 mm and 75 mm.

6.3 Visual examination

The specimens shall visually be symmetrical with the curved side even and circular.

6.4 Measurement of dimensions

The height and diameter of each test specimen shall be measured in accordance with EN 12697-29.

6.5 Age of Specimen

SIST Preview
(https://ecommerce.sist.si)

Prior to the start of testing, the specimens shall be stored on a flat surface at a temperature of not more than 25 °C for between 48 hours and 42 days from the time of their manufacture.

NOTE The storage time influences the mechanical properties of the specimen.

For purposes other than type testing, different storage times can be applied.

SIST EN 12697-23:2018
https://ecommerce.sist.si/catalog/standards/sist/fd422005-7b22-4b26-acff-08177e2ac94e/sist-en-12697-23-2018

7 Conditioning

7.1 Thermal treatment

Bring the test specimen to the test temperature selected according to 8 by placing it either:

— in a water bath, protecting the specimen from the water by enclosing it in a sealed soft plastic bag or other suitable watertight protection and ensuring that that the watertight protection is pressed closely to the surface of the specimen in order to allow adequate heat transmission; or

— in a thermostatically controlled air chamber.

Vacuum packing of the specimens may be considered suitable to ensure adequate heat transmission in the water bath.

7.2 Storage

Store the specimens for at least 2 h in the water bath or air chamber for specimens with diameter less than 150 mm and for at least 4 h for specimens with diameter of 150 mm or larger.

The use of a dummy specimen with temperature indicator can provide a check that the temperature is correct, particular when using air chamber conditioning.

SIST EN 12697-23:2018

8 Test temperature

Unless defined elsewhere, the test temperature shall be (10 ± 2) °C.

The test temperature influences the indirect tensile strength. Other test temperatures between +5 °C and +25 °C can be applied. This temperature range is suitable for reaching tensile cracking of the specimen. For higher temperatures, the specimen failure mode is compressive.

9 Test procedure

9.1 Take a conditioned specimen and place it in the testing head. The testing machine shall be placed in a room with temperature between 15 °C and 25 °C.

It is recommended to clean and lubricate the guide rods of the test head to ensure that the upper test head slides freely over them.

9.2 Align the specimen on the lower loading strip, so that the specimen can be loaded diametrically.

9.3 Start the compression of the specimen. Apply a diametrical load continuously and without shock, at a constant speed of deformation of (50 ± 2) mm/min after a transitory period less than 20 % of the loading time, until the peak load is reached, and record the peak load, P_i, applied, where i is the index of the determination. Continue loading until the specimen breaks. Record the type of failure according to Figure 2, which is categorized as:

a) "clear tensile break" – Specimen clearly broken along a diametrical line, except perhaps for small triangular sections close to the loading strips;

b) "deformation" – Specimens without a clearly visible tensile break line; or

c) "combination" – Specimens with a limited tensile break line and larger deformed areas close to the loading strips.

SIST Preview
(https://ecommerce.sist.si)
https://ecommerce.sist.si/catalog/standards/sist/fd422005-7b22-4b26-acff-08177e2ac94e/sist-en-12697-23-2018

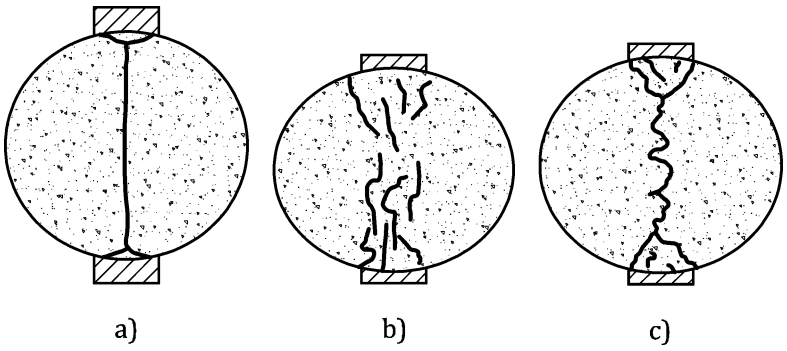

Figure 2 — Types of failure

Break the specimen open and visually inspect the appearance of the surfaces for evidence of cracked or broken aggregates, and record if the aggregates at the surface mainly are broken or intact.

9.4 The test shall be completed within 2 min after the specimen has been taken from conditioning.

9.5 Repeat 9.1 to 9.4, to give one determination of indirect tensile strength as the average of the results obtained on at least three individual specimens.