SLOVENSKI STANDARD
SIST EN 1957:2012

01-december-2012

Nadomešča:

SIST EN 1957:2001

Pohištvo - Postelje in posteljni vložki - Preskusne metode za ugotavljanje funkcionalnih značilnosti in kriteriji ocenjevanja

Furniture - Beds and mattresses - Test methods for the determination of functional characteristics and assessment criteria

SIST Preview
(https://ecommerce.sist.si)

Möbel - Betten und Matratzen - Prüfverfahren zur Bestimmung der funktionellen Eigenschaften

(https://ecommerce.sist.si)

Meubles - Lits et matelas - Méthodes d'essai pour la détermination des caractéristiques fonctionnelles

SIST EN 1957:2012
https://ecommerce.sist.si/catalog/standards/sist/3f63e699-5435-4cb6-9590-eafa233d443e/sist-en-1957-2012
SIST EN 1957:2012
https://ecommerce.sist.si/catalog/standards/sist/3f63e699-5435-4cb6-9590-eafa233d443e/sist-en-1957-2012

Ta slovenski standard je istoveten z: EN 1957:2012

ICS:

97.140 Pohištvo Furniture

SIST EN 1957:2012 **en,fr,de**

2003-01.Slovenski inštitut za standardizacijo. Razmnoževanje celote ali delov tega standarda ni dovoljeno.

SIST Preview
(https://ecommerce.sist.si)

SIST EN 1957:2012
https://ecommerce.sist.si/catalog/standards/sist/3f63e699-5435-4cb6-9590-eafa233d443e/sist-en-1957-2012

SIST EN 1957:2012

EUROPEAN STANDARD

NORME EUROPÉENNE

EUROPÄISCHE NORM

EN 1957

October 2012

ICS 97.140

Supersedes EN 1957:2000

English Version

Furniture - Beds and mattresses - Test methods for the determination of functional characteristics and assessment criteria

Meubles - Lits et matelas - Méthodes d'essai pour la détermination des caractéristiques fonctionnelles et critères d'évaluation

Möbel - Betten und Matratzen - Prüfverfahren zur Bestimmung der funktionellen Eigenschaften und Leistungskriterien

This European Standard was approved by CEN on 18 August 2012.

CEN members are bound to comply with the CEN/CENELEC Internal Regulations which stipulate the conditions for giving this European Standard the status of a national standard without any alteration. Up-to-date lists and bibliographical references concerning such national standards may be obtained on application to the CEN-CENELEC Management Centre or to any CEN member.

This European Standard exists in three official versions (English, French, German). A version in any other language made by translation under the responsibility of a CEN member into its own language and notified to the CEN-CENELEC Management Centre has the same status as the official versions.

CEN members are the national standards bodies of Austria, Belgium, Bulgaria, Croatia, Cyprus, Czech Republic, Denmark, Estonia, Finland, Former Yugoslav Republic of Macedonia, France, Germany, Greece, Hungary, Iceland, Ireland, Italy, Latvia, Lithuania, Luxembourg, Malta, Netherlands, Norway, Poland, Portugal, Romania, Slovakia, Slovenia, Spain, Sweden, Switzerland, Turkey and United Kingdom.

SIST EN 1957:2012
https://ecommerce.sist.si/catalog/standards/sist/3f63e699-5435-4cb6-9590-eafa233d443e/sist-en-1957-2012

EUROPEAN COMMITTEE FOR STANDARDIZATION
COMITÉ EUROPÉEN DE NORMALISATION
EUROPÄISCHES KOMITEE FÜR NORMUNG

Management Centre: Avenue Marnix 17, B-1000 Brussels

© 2012 CEN All rights of exploitation in any form and by any means reserved worldwide for CEN national Members.

Ref. No. EN 1957:2012: E

SIST EN 1957:2012

Contents

Page

Foreword 3

1 Scope 4

2 Normative references 4

3 Terms and definitions 4

4 General test conditions 5
4.1 Preliminary preparation 5
4.2 Tolerances 5
4.3 Sequence of testing 5

5 Test apparatus 6
5.1 Floor surface 6
5.2 Stops 6
5.3 Standard test bed base for mattresses (durability test) 6
5.4 Side support profile 6
5.5 Standard table/test board (measuring) 7
5.6 Loading pad 7
5.7 Equipment for recording the load/deflection curves 8
5.8 Equipment for the durability test 8

6 Functional characteristics 9
6.1 Measurable functional characteristics 9
6.2 Visual inspection 9

7 Test methods 10
7.1 General 10
7.2 Durability test 10
7.3 Load/deflection curve 10

8 Evaluation of characteristic parameters 11
8.1 Determination of height loss 11
8.2 Determination of hardness value 11
8.3 Determination of firmness rating 12

9 Durability of bed edge 13

10 Test report 13

Annex A (informative) Basis of determination of firmness rating 14

SIST Preview
(https://ecommerce.sist.si)
SIST EN 1957:2012
https://ecommerce.sist.si/catalog/standards/sist/3f63e699-5435-4cb6-9590-eafa233d443e/sist-en-1957-2012

SIST EN 1957:2012

Foreword

This document (EN 1957:2012) has been prepared by Technical Committee CEN/TC 207 “Furniture”, the secretariat of which is held by UNI.

This European Standard shall be given the status of a national standard, either by publication of an identical text or by endorsement, at the latest by April 2013, and conflicting national standards shall be withdrawn at the latest by April 2013.

Attention is drawn to the possibility that some of the elements of this document may be the subject of patent rights. CEN [and/or CENELEC] shall not be held responsible for identifying any or all such patent rights.

This document supersedes EN 1957:2000.

The main change with respect to the previous edition is the correcting of the dimensions of the roller (Figure 3) to enable the roller to be manufactured.

According to the CEN/CENELEC Internal Regulations, the national standards organisations of the following countries are bound to implement this European Standard: Austria, Belgium, Bulgaria, Croatia, Cyprus, Czech Republic, Denmark, Estonia, Finland, Former Yugoslav Republic of Macedonia, France, Germany, Greece, Hungary, Iceland, Ireland, Italy, Latvia, Lithuania, Luxembourg, Malta, Netherlands, Norway, Poland, Portugal, Romania, Slovakia, Slovenia, Spain, Sweden, Switzerland, Turkey and the United Kingdom.

SIST Preview
(https://ecommerce.sist.si)

SIST EN 1957:2012
https://ecommerce.sist.si/catalog/standards/sist/3f63e699-5435-4cb6-9590-eafa233d443e/sist-en-1957-2012

SIST EN 1957:2012

1 Scope

This European Standard specifies test methods for the determination of the durability and hardness of mattresses and all types of fully erected beds with mattresses (and mattress pads when they form a unit with the mattress). It does not apply to water beds, air beds and children cots.

It includes a method for the determination of the firmness rating of a mattress or a bed correlating to the subjective assessment made by people (see Annex A). It needs to be emphasized that the firmness rating cannot be used to demonstrate comfort and/or quality of a mattress or a complete bed.

Ageing and degradation caused by air, light, humidity and temperature is not included. The test results are only valid for the article tested. When test results are intended to be applied to other similar articles, the test specimen shall be representative of them.

2 Normative references

The following documents, in whole or in part, are normatively referenced in this document and are indispensable for its application. For dated references, only the edition cited applies. For undated references, the latest edition of the referenced document (including any amendments) applies.

EN 1334, *Domestic furniture — Beds and mattresses — Methods of measurement and recommended tolerances*

EN 1725:1998, *Domestic furniture — Beds and mattresses — Safety requirements and test methods*

SIST Preview
(https://ecommerce.sist.si)

3 Terms and definitions

For the purposes of this document, the following terms and definitions apply.

SIST EN 1957:2012
https://ecommerce.sist.si/catalog/standards/sist/3f63e699-5435-4cb6-9590-eafa233d443e/sist-en-1957-2012

3.1
test unit
mattress or mattress/bed combination

3.2
durability test
test simulating the repeated application of loads and/or movement of components occurring during long-term use and assessing the strength of the article under such conditions and is a test is a procedure mainly intended to evaluate the change of the properties of the test unit caused by repeated loadings

3.3
load/deflection curve
curves that are obtained by pressing a load pad into the test unit and measuring the associated value of indentation and force simultaneously

3.4
hardness value *(H)*
determined from load/deflection measurement, in N/mm

3.5
firmness rating *(H_s)*
expression of the subjective assessment by persons determined from the hardness value upon results from empiric studies

SIST EN 1957:2012

3.6
height loss
change in the height of a test unit, in mm, caused by the durability test

4 General test conditions

4.1 Preliminary preparation

Unless otherwise specified by the manufacturer, the test unit shall be conditioned for at least one week in a standardised climate of (23 ± 2) °C and (50 ± 5) % RH immediately prior to testing. Subsequent conditioning shall also take place in this climate.

The tests shall be carried out at indoor ambient conditions but if during a test the temperature is outside the range 15 °C to 25 °C the maximum and/or minimum temperature shall be recorded in the test report.

During conditioning and handling, mattresses shall be kept flat and unloaded.

If a test cannot be carried out as specified in this European Standard, e.g. because a loading pad cannot be used for the application of a force due to the design of a product, the test shall be carried out as far as possible as specified.

Complete beds shall be tested as delivered. Knock-down type beds shall be assembled according to the instruction supplied with the test unit. If the test unit can be assembled or combined in different ways, the most adverse combination shall be used for the test. Knock-down fittings shall be tightened before testing.

SIST Preview
(https://ecommerce.sist.si)

If necessary, mattress pads shall be prevented from moving during testing by a suitable means, e.g. adhesive tape or pins.

In cases where bed bases are adjustable in hardness, the setting during the test shall be recorded in the test report.

SIST EN 1957:2012

If the production information states that the mattress has a soft side and a firm side, both sides shall be tested using separate mattresses.

4.2 Tolerances

Unless otherwise stated the following tolerances are applicable to the test equipment:

a) all forces shall have an accuracy of ± 5 % of the nominal force;

b) all masses an accuracy of ± 0,5 % of the nominal mass;

c) all dimensions an accuracy of ± 1 mm of the nominal dimension;

d) the tolerance for position of loading pads shall be ± 5 mm.

NOTE For the purposes of uncertainty measurement, test results are not considered to be adversely affected when the above tolerances are met.

4.3 Sequence of testing

All tests shall be carried out on the same test unit and in the following sequence:

a) conditioning, at least one week (according to 4.1);

b) durability pre-conditioning: 100 cycles (according to 7.2);

SIST EN 1957:2012

c) conditioning, at least 5 h (according to 4.1);

d) measurement of unit height (according to 8.1) at 100 cycles and hardness measurement (according to 7.3 and 8.2) beginning within 5 min from moving the mattress from the standardised climate (according to 4.1);

e) durability test : 29 900 cycles (according to 7.2);

f) conditioning, at least 5 h (according to 4.1)[1)];

g) determination of hardness (according to 8.2) and height loss between 100 cycles and after the test (according to 8.1);

h) bed edge test:

   1) durability test at 100 cycles (according to Clause 9);

   2) measurement of unit height at 100 cycles (according to 8.1);

   3) durability test on bed edge: 4 900 cycles (according to Clause 9);

   4) measurement of unit height and height loss (according to 8.1).

5 Test apparatus

SIST Preview
(https://ecommerce.sist.si)

5.1 Floor surface

Rigid, horizontal and flat.

5.2 Stops

SIST EN 1957:2012
https://ecommerce.sist.si/catalog/standards/sist/3f63c699-5435-4cb6-9590-ecfc233d442e/sist-en-1957-2012

Stops shall be used to prevent a complete bed or bed frame from sliding but not tilting and shall be no higher than 12 mm except in cases where the design of the bed necessitates the use of higher stops, in which case the lowest that will prevent the bed from moving, shall be used.

5.3 Standard test bed base for mattresses (durability test)

Rigid, horizontal, flat and smooth.

5.4 Side support profile

If the mattress is not prevented from moving during the durability test by the bed structure, it shall be prevented from moving by two side support profiles as illustrated in Figure 1. The internal distance between the supports (W_s) shall be equal to the width of the mattress measured according to EN 1334, ± 2 mm. The height of the support profiles (h) shall not exceed one third of the mattress thickness (H), measured according to EN 1334. The length of the support profiles shall be at least equal to the length of the test unit.

If necessary, mattress pads shall be fixed during the tests by a suitable manner.

---

1) Intermediate measurements may be carried out under these conditions.

SIST EN 1957:2012

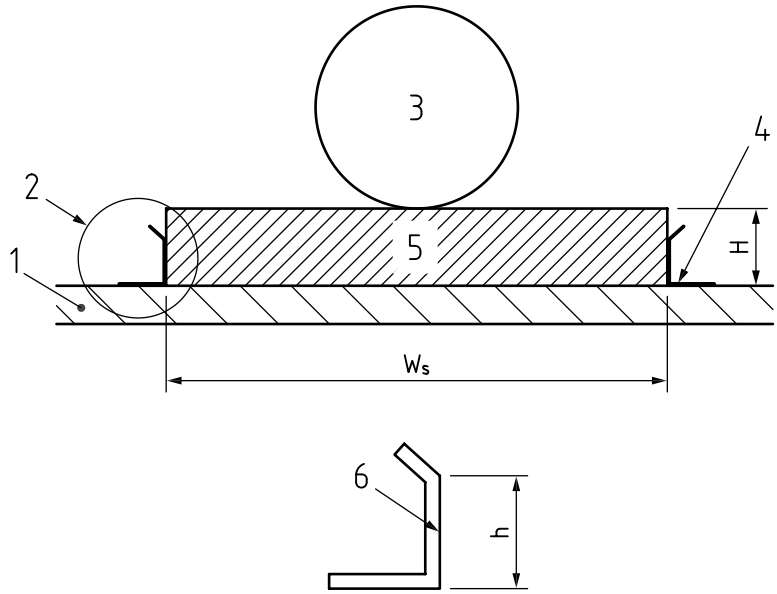

Key

1 standard test bed base
2 side support profile
3 roller
H height of mattress
W_s distance between supports
4 side support profile
5 mattress
6 enlargement of side support profile (2)
h height of support profiles

SIST Preview
(https://ecommerce.sist.si)

Figure 1 — Side support profile

SIST EN 1957:2012
https://ecommerce.sist.si/catalog/standards/sist/5f05ec09-5435-4cb6-9590-eafa233d443e/sist-en-1957-2012

5.5 Standard table/test board (measuring)

Horizontal, flat and smooth surface, large enough to fully support the mattress in any measuring position. At the loading position, the deflection shall not exceed 1 mm under 1000 N load. The overall flatness tolerance of the test board shall be 2 mm/1000 mm.

5.6 Loading pad

Rigid circular object 355 mm in diameter the face of which has a convex spherical curvature of 800 mm radius with a 20 mm front edge radius (see Figure 2).

The loading pad shall have a smooth surface and shall be mounted to the loading system of the test machine (5.7) by a ball joint as close as possible to the indentor surface (see Figure 2).

SIST EN 1957:2012

Dimensions in millimetres

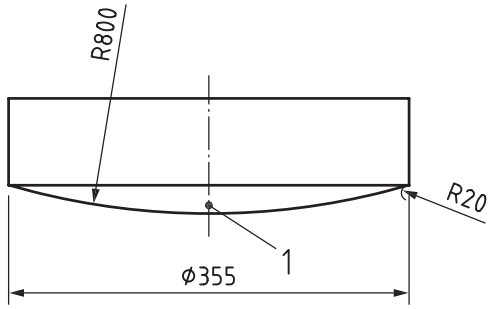

Key

1 ball joint as low as possible

Figure 2 — Loading pad

5.7 Equipment for recording the load/deflection curves

The equipment for recording the load/deflection curves shall be a loading pad (5.6) and a testing machine capable of applying a vertical downward load up to 1000 N.

The travel speed for both loading and unloading shall be (90 ± 5) mm/minute.

Load and height with reference to a fixed datum shall be measured.

The accuracy of the height measuring system shall be ± 0,5 mm or better.

The accuracy of the load measuring system shall be ± 1 % of the max load (1000 N) or better.

The equipment shall be so that horizontal forces do not influence the measurement.

SIST Preview
(https://ecommerce.sist.si)
SIST EN 1957:2012
https://standards.iteh.ai/catalog/standards/sist/6a233d443e/sist-en-1957-2012

5.8 Equipment for the durability test

The equipment consists of a roller with dimensions and a shape illustrated in Figure 3 and a mechanism capable of relative horizontal movement of the roller on the unit surface.

The roller surface shall be hard, smooth and without scratches or other surface defects.

The total rolling system shall apply a load of (1400 ± 7) N measured in the static condition.

The roller shall have a rotation moment of inertia of 0,5 kgm² ± 0,05 kgm². The roller shall be free to pivot along its longitudinal and lateral axis relative to the horizontal.

The roller shall be capable of following the surface of the mattress, and it shall be free to move up and down to follow the mattress surface.

The forces on the roller shall act horizontally (see 7.2) at the centre point. The motion shall be approximately sinusoidal (within ± 10 %) and symmetrical along the longitudinal symmetry axis of the unit. The frequency shall be (16 ± 2) cycles per minute.