INTERNATIONAL STANDARD

ISO 9283

Second edition
1998-04-01

Manipulating industrial robots — Performance criteria and related test methods

Robots manipulateurs industriels — Critères de performance et méthodes d'essai correspondantes

SIST Preview
(https://ecommerce.sist.si)

ISO 9283:1998
https://ecommerce.sist.si/catalog/standards/sist/b00c9665-53ff-4265-933d-77a544eb4e26/iso-9283-1998

Reference number
ISO 9283:1998(E)

Contents

		Page
1	Scope	1
2	Normative references	2
3	Definitions	2
4	Units	2
5	Abbreviations and symbols	3
5.1	Basic abbreviations	3
5.2	Quantities	3
5.3	Indices	4
5.4	Other symbols	4
6	Performance testing conditions	4
6.1	Robot mounting	4
6.2	Conditions prior to testing	4
6.3	Operating and environmental conditions	5
6.4	Displacement measurement principles	5
6.5	Instrumentation	6
6.6	Load to the mechanical interface	6
6.7	Test velocities	8

SIST Preview
(https://ecommerce.sist.si)
ISO 9283:1998
https://ecommerce.sist.si/catalog/standards/sist/b00c9665-53ff-4265-933d-77a544eb4e26/iso-9283-1998

© ISO 1998

All rights reserved. Unless otherwise specified, no part of this publication may be reproduced or utilized in any form or by any means, electronic or mechanical, including photocopying and microfilm, without permission in writing from the publisher.

International Organization for Standardization
Case postale 56 • CH-1211 Genève 20 • Switzerland
Internet central@iso.ch
X.400 c=ch; a=400net; p=iso; o=isocs; s=central

Printed in Switzerland

6.8 Definitions of poses to be tested and paths to be followed 9

6.9 Number of cycles 15

6.10 Test procedure 15

6.11 Characteristics to be tested - Applications 16

7 Pose characteristics 16

7.1 General description 16

7.2 Pose accuracy and pose repeatability 17

7.3 Distance accuracy and repeatability 24

7.4 Position stabilization time 29

7.5 Position overshoot 30

7.6 Drift of pose characteristics 31

7.7 Exchangeability 34

8 Path characteristics 35

8.1 General 35

8.2 Path accuracy 36

8.3 Path repeatability 37

8.4 Path accuracy on reorientation 39

8.5 Cornering deviations 40

8.6 Path velocity characteristics 42

9 Minimum posing time 44

10 Static compliance 46

11 Application specific performance criteria 46

11.1 Weaving deviations 46

12 Test report 48

Annex

A (normative) Parameters for comparison tests 49

B (informative) Guide for selection of tests for typical applications 54

C (informative) Example of a test report 56

SIST Preview
(https://ecommerce.sist.si)
ISO 9283:1998
https://ecommerce.sist.si/catalog/standards/sist/3d77a544eb4e26/iso-9283-1998

Foreword

ISO (the International Organization for Standardization) is a worldwide federation of national standards bodies (ISO member bodies). The work of preparing International Standards is normally carried out through ISO technical committees. Each member body interested in a subject for which a technical committee has been established has the right to be represented on that committee. International organizations, governmental and non-governmental, in liaison with ISO, also take part in the work. ISO collaborates closely with the International Electrotechnical Commission (IEC) on all matters of electrotechnical standardization.

Draft International Standards adopted by the technical committees are circulated to the member bodies for approval before their acceptance as International Standards by the ISO Council. In accordance with ISO/IEC Directives they are approved if two-thirds of the votes cast by the P-members of the technical committee or sub-committee are in favour, and not more than one-quarter of the total number of votes cast are negative.

International Standard ISO 9283 was prepared by Technical Committee ISO/TC 184, *Industrial automation systems and integration*, Subcommittee SC 2, *Robots for manufacturing environment*.

This second edition cancels and replaces the first edition (ISO 9283:1990 and Amendment 1:1991), of which it constitutes a technical revision.

Annex A forms an integral part of this International Standard. Annexes B and C are for information only.

SIST Preview
(https://ecommerce.sist.si)
ISO 9283:1998
https://ecommerce.sist.si/catalog/standards/sist/b00c9865-55ff-4265-933d-77a544eb4e26/iso-9283-1998

Introduction

ISO 9283 is part of a series of International Standards dealing with manipulating industrial robots. Other International Standards cover such topics as safety, general characteristics, coordinate systems, terminology, and mechanical interfaces. It is noted that these International Standards are interrelated and also related to other International Standards.

ISO 9283 is intended to facilitate understanding between users and manufacturers of robots and robot systems. It defines the important performance characteristics, describes how they shall be specified and recommends how they should be tested. An example of how the test results should be reported is included in Annex C of this International Standard. The characteristics for which test methods are given in this International Standard are those considered to affect robot performance significantly.

It is intended that the user of this International Standard selects which performance characteristics are to be tested, in accordance with his own specific requirements.

The tests described in this International Standard may be applied in whole or in part, depending upon the robot type and requirements.

The core part of ISO 9283 deals with testing of individual characteristics. Specific parameters for comparison testing is dealt with in Annex A (normative) for pose-to-pose characteristics and path characteristics.

Annex B (informative) of this International Standard provides guidance for selection of tests for typical applications.

Annex C (informative) of this International Standard provides a recommended format of the test report including the minimum required information and the summary of the test results.

This page intentionally left blank

SIST Preview
(https://ecommerce.sist.si)

ISO 9283:1998
https://ecommerce.sist.si/catalog/standards/sist/b00c9665-53ff-4265-933d-77a544eb4e26/iso-9283-1998

Manipulating industrial robots — Performance criteria and related test methods

1 Scope

This International Standard describes methods of specifying and testing the following performance characteristics of manipulating industrial robots:

- pose accuracy and pose repeatability;
- multi-directional pose accuracy variation;
- distance accuracy and distance repeatability;
- position stabilization time;
- position overshoot;
- drift of pose characteristics;
- exchangeability;
- path accuracy and path repeatability;
- path accuracy on reorientation
- cornering deviations;
- path velocity characteristics;
- minimum posing time;
- static compliance;
- weaving deviations.

SIST Preview
(https://ecommerce.sist.si)
ISO 9283:1998
https://standards.iteh.ai/catalog/standards/sist/b00c9665-53ff-4265-933d-77a544eb4e26/iso-9283-1998

This International Standard does not specify which of the above performance characteristics are to be chosen for testing a particular robot. The tests described in this International Standard are primarily intended for developing and verifying individual robot specifications, but can also be used for such purposes as prototype testing, type testing or acceptance testing.

To compare performance characteristics between different robots, as defined in this International Standard, the following parameters have to be the same: test cube sizes, test loads, test velocities, test paths, test cycles, environmental conditions.

Annex A provides parameters specific for comparison testing of pose-to-pose characteristics and path characteristics.

This International Standard applies to all manipulating industrial robots as defined in ISO 8373. However, for the purpose of this International Standard the term "robot" means manipulating industrial robot.

2 Normative references

The following standards contain provisions which, through reference in this text, constitute provisions of this International Standard. At the time of publication, the editions indicated were valid. All International Standards are subject to revision, and parties to agreements based on this International Standard are encouraged to investigate the possibility of applying the most recent editions of the standards indicated below. Members of IEC and ISO maintain registers of currently valid International Standards.

ISO 8373:1994, *Manipulating industrial robots — Vocabulary.*

ISO 9787:1990, *Manipulating industrial robots — Coordinate systems and motions.*

ISO 9946:1991, *Manipulating industrial robots — Presentation of characteristics.*

3 Definitions

For the purpose of this International Standard, the definitions given in ISO 8373 and the following definitions apply.

3.1 cluster: Set of measured points used to calculate the accuracy and the repeatability characteristics (example shown diagrammatically in figure 8).

3.2 barycentre: For a cluster of *n* points, defined by their coordinates (x_j — y_j — z_j), the barycentre of that cluster of points is the point whose coordinates are the mean values $\bar{x}$, $\bar{y}$, *and* $\bar{z}$ calculated by formulae given in 7.2.1.

3.3 measuring dwell: Delay at the measurement point prior to recording data (e.g. time between control signal "in position" and the "start measuring" of the measuring device).

3.4 measuring time: Time elapsed when measurements are recorded.

SIST Preview
(https://ecommerce.sist.si)

4 Units

ISO 9283:1998
https://ecommerce.sist.si/catalog/standards/sist/b00c9665-53ff-4265-933d-77a544eb4e26/iso-9283-1998

Unless otherwise stated, all dimensions are as follows:

— length in millimetres ..... (mm)
— angle in radians or degrees..... (rad) or (°)
— time in seconds ..... (s)
— mass in kilograms ..... (kg)
— force in newtons ..... (N)
— velocity in metres per second..... (m/s),
degrees per second ..... (°/s) or
radians per second ..... (rad/s)

5 Abbreviations and symbols

For the purposes of this International Standard, the following abbreviations and symbols apply.

5.1 Basic abbreviations

A	Accuracy
R	Repeatability
v	Variation
F	Fluctuation
d	Drift
P	Pose
D	Distance
T	Path (trajectory)
V	Velocity
W	Weaving
E	Exchangeability

5.2 Quantities

a, b, c	Orientation (angular components) about the *x, y, and z*-axis
x, y, z	Linear coordinates along the *x-, y-, z*-axis
n	Number of measurement cycles
m	Number of measurement points along the path
S	Standard deviation
D	Distance between two points
l	Distance between the attained pose and the barycentre of the attained poses
v	Path velocity
AP	Pose accuracy
RP	Pose repeatability
vAP	Multi-directional pose accuracy variation
AD	Distance accuracy
RD	Distance repeatability
t	Position stabilization time
OV	Position overshoot
dAP	Drift of pose accuracy
dRP	Drift of pose repeatability
AT	Path accuracy
RT	Path repeatability
CR	Cornering round-off error
CO	Cornering overshoot
AV	Path velocity accuracy
RV	Path velocity repeatability

SIST Preview
(https://ecommerce.sist.si)
ISO 9283:1998
https://ecommerce.sist.si/catalog/standards/sist/b00c9665-53ff-4265-933d-77a544eb4e26/iso-9283-1998

FV	Path velocity fluctuation
WS	Weaving stroke error
WF	Weaving frequency error

5.3 Indices

a, b, c	Indicates an orientation characteristic about the *x-, y-, z*-axis
x, y, z	Indicates a positioning characteristic along the *x-, y-, z*-axis
c	Command
i	Indicates the *i*-th abscissa
j	Indicates the *j*-th cycle
k	Indicates the *k*-th direction
h	Indicates the *h*-th direction
1,2	Indicates the pose number 1,2 ....
e	Corner point (edge)
g	Point where the robot performance falls within the specified path characteristics
p	Position

5.4 Other symbols

C_1 to C_8	Corners of the test cube
E_1 to E_4	Corners of the rectangular plane for the measurement of path characteristics
G	The barycentre of a cluster of attained poses
O_c	Origin of the measurement system coordinates

NOTE 1 — Further symbols are explained in the respective subclauses.

SIST Preview
(https://ecommerce.sist.si)
ISO 9283:1998
https://ecommerce.sist.si/catalog/standards/sist/b00c9665-53ff-4265-933d-77a544eb4e26/iso-9283-1998

6 Performance testing conditions

6.1 Robot mounting

The robot shall be mounted in accordance with the manufacturer's recommendations.

6.2 Conditions prior to testing

The robot shall be completely assembled and fully operational. All necessary levelling operations, alignment procedures and functional tests shall be satisfactorily completed.

The tests shall be preceded by an appropriate warm-up operation if specified by the manufacturer, except for the test of drift of pose characteristics which shall start from cold condition.

If the robot has facilities for adjustment by the user that can influence any of the tested characteristics, or if characteristics can be recorded only with specific functions (e.g. calibration facility where poses are given by off-line programming), the condition used during the test shall be specified in the test report and (where relevant for individual characteristics) shall be kept constant during each test.

6.3 Operating and environmental conditions

The performance characteristics as specified by the manufacturer and determined by the related test methods in this International Standard, are valid only under the environmental and normal operating conditions as stipulated by the manufacturer.

6.3.1 Operating conditions

The normal operating conditions used in the tests shall be as stated by the manufacturer.

Normal operating conditions include, but are not limited to, requirements for electrical, hydraulic and pneumatic power, power fluctuations and disturbances, maximum safe operating limits (see ISO 9946).

6.3.2 Environmental conditions

6.3.2.1 General

The environmental conditions used in the tests shall be as stated by the manufacturer, subject to the requirements of 6.3.2.2.

Environmental conditions include temperature, relative humidity, electromagnetic and electrostatic fields, radio frequency interference, atmospheric contaminants, and altitude limits.

Standard Preview
(https://ecommerce.sist.si)

6.3.2.2 Testing temperature

The ambient temperature (θ) of the testing environment should be 20° C. Other ambient temperatures shall be stated and explained in the test report. The testing temperature shall be maintained at

https://ecommerce.sist.si/catalog/standards/sist/b00c9663-551f-4265-955d-77a544eb4e26/iso-9283-1998

$(\theta \pm 2)$° C

The robot and the measuring instruments should have been in the test environment long enough (preferably overnight) so that they are in a thermally stable condition before testing. They shall be protected from draughts and external thermal radiation (e.g. sunlight, heaters).

6.4 Displacement measurement principles

The measured position and orientation data (x_j, y_j, z_j, a_j, b_j, c_j) shall be expressed in a base coordinate system (see ISO 9787), or in a coordinate system defined by the measurement equipment.

If the robot command poses and paths are defined in another coordinate system (e.g. by off-line programming) than the measuring system, the data must be transferred to one common coordinate system. The relationship between the coordinate systems shall be established by measurement. In this case the measurement poses given in 7.2.1 shall not be used as reference positions for the transformation data. Reference and measurement points should be inside of the test cube and should be as far away from each other as possible (e.g. if P_1 to P_5 are measurement points, C_3, C_4, C_5, C_6 may be used).

For directional components of the performance criteria, the relationship between the base coordinate system and the selected coordinate system shall be stated in the test results.

The measurement point shall lie at a distance from the mechanical interface as specified by the manufacturer. The position of this point in the mechanical interface coordinate system (see ISO 9787) shall be recorded (see figure 7).

The sequence of rotation used when calculating the orientation deviation should be in a way so that the orientation can be continuous in value. This is independent if the rotation is about moving axes (navigation angles or Euler angles), or rotation about stationary axes.

Unless otherwise specified, the measurements shall be taken after the attained pose is stabilized.

6.5 Instrumentation

For path characteristics, overshoot and pose stabilization measurements, the dynamic characteristics of the data acquisition equipment (e.g. sampling rate) shall be high enough to ensure that an adequate representation of the characteristics being measured is obtained.

The measuring instruments used for the tests shall be calibrated and the uncertainty of measurement shall be estimated and stated in the test report. The following parameters should be taken into account:

- instrumentation errors;
- systematic errors associated with the method used;
- calculation errors.

The total uncertainty of measurement shall not exceed 25 % of the magnitude of the characteristic under test.

SIST Preview
(https://ecommerce.sist.si)

6.6 Load to the mechanical interface

All tests shall be executed with a test load equal to 100 % of rated load conditions, i.e. mass, position of centre of gravity, moments of inertia, according to the manufacturer's specification. The rated load conditions shall be specified in the test report.

https://ecommerce.sist.si/catalog/standards/sist/b00c9665-53ff-4265-933d-77a544eb4e26/iso-9283-1998

To characterize robots with load dependent performances, additional optional tests can be made with the mass of rated load reduced to 10 % as indicated in table 1 or some other value as specified by the manufacturer.

When a part of the measuring instrumentation is attached to the robot, its mass and position shall be considered as part of the test load.

Figure 1 shows an example of test end effector with CG (centre of gravity) and TCP (tool centre point) offsets. The TCP is the measurement point (MP) during the test. The measurement point position shall be specified in the test report.

Table 1 - Test loads

Characteristics to be tested	Load to be used	
	100 % of rated load (X = mandatory)	**The mass of rated load reduced to 10 %** (O = optional)
Pose accuracy and pose repeatability	X	O
Multi-directional pose accuracy variation	X	O
Distance accuracy and distance repeatability	X	—
Position stabilization time	X	O
Position overshoot	X	O
Drift of pose characteristics	X	—
Exchangeability	X	O
Path accuracy and path repeatability	X	O
Path accuracy on reorientation	X	O
Cornering deviations	X	—
Path velocity characteristics	X	O
Minimum posing time	X	O
Static compliance	—	See clause 10
Weaving deviations	X	O

SIST Preview
(https://ecommerce.sist.si)
ISO 9283:1998
https://ecommerce.sist.si/catalog/standards/sist/b00c9665-53ff-4265-933d-77a544eb4e26/iso-9283-1998

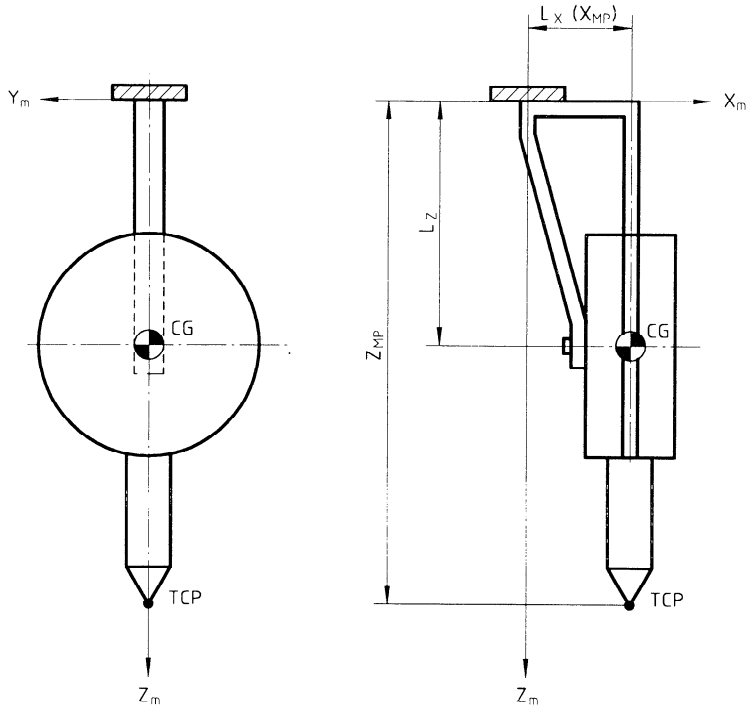

Figure 1 - An example of test end effector

6.7 Test velocities

SIST Preview
(https://ecommerce.sist.si)

All pose characteristics shall be tested at the maximum velocity achievable between the specified poses, i.e. with the velocity override set to 100 %, in each case. Additional tests could be carried out at 50 % and/or 10 % of this velocity.

For path characteristics, the tests shall be conducted at 100 %, 50 %, and 10 % of rated path velocity as specified by the manufacturer for each of the characteristics tested (see table 3). Rated path velocity shall be specified in the test report. The velocity specified for each test depends on the shape and size of path. The robot shall be able to achieve this velocity over at least 50 % of the length of the test path. The related performance criteria shall be valid during this time.

It shall be reported if the velocity has been specified in pose-to-pose mode or continuous path mode, if selectable.

A summary of the test velocities is given in tables 2 and 3.

Table 2 - Test velocities for pose characteristics

Characteristics to be tested	Velocity	
	100 % of rated velocity (X = mandatory)	**50 % or 10 % of rated velocity** (O = optional)
Pose accuracy and pose repeatability	X	O
Multi-directional pose accuracy variation	X	O
Distance accuracy and repeatability	X	O
Position stabilization time	X	O
Position overshoot	X	O
Drift of pose characteristics	X	—
Exchangeability	X	O
Minimum posing time	See clause 9 and table 20	

Table 3 - Test velocities for path characteristics

Characteristics to be tested	Velocity		
	100 % of rated path velocity (X = mandatory)	**50 % of rated path velocity** (X = mandatory)	**10 % of rated path velocity** (X = mandatory)
Path accuracy and path repeatability	X	X	X
Path accuracy on reorientation	X	X	X
Cornering deviations	X	X	X
Path velocity characteristics	X	X	X
Weaving deviations	X	X	X

SIST Preview (https://ecommerce.sist.si) ISO 9283:1998 https://ecommerce.sist.si/catalog/standards/sist/b00e9665-53ff-4265-933d-a7a544eb4e26/iso-9283-1998

6.8 Definitions of poses to be tested and paths to be followed

6.8.1 Objective

This subclause describes how five suitable positions are located in a plane placed inside a cube within the working space. It also describes test paths to be followed. When robots have a range of motion along one axis, small with respect to the other, replace the cube by a rectangular parallelepiped.